# Time control technique

DOLD


**Алматы** (727)345-47-04
**Ангарск** (3955)60-70-56
**Архангельск** (8182)63-90-72
**Астрахань** (8512)99-46-04
**Барнаул** (3852)73-04-60
**Белгород** (4722)40-23-64
**Благовещенск** (4162)22-76-07
**Брянск** (4832)59-03-52
**Владивосток** (423)249-28-31
**Владикавказ** (8672)28-90-48
**Владимир** (4922)49-43-18
**Волгоград** (844)278-03-48
**Вологда** (8172)26-41-59
**Воронеж** (473)204-51-73
**Екатеринбург** (343)384-55-89
**Иваново** (4932)77-34-06
**Ижевск** (3412)26-03-58
**Иркутск** (395)279-98-46
**Казань** (843)206-01-48
**Калининград** (4012)72-03-81
**Калуга** (4842)92-23-67
**Кемерово** (3842)65-04-62
**Киров** (8332)68-02-04
**Коломна** (4966)23-41-49
**Кострома** (4942)77-07-48
**Краснодар** (861)203-40-90
**Красноярск** (391)204-63-61
**Курск** (4712)77-13-04
**Курган** (3522)50-90-47
**Липецк** (4742)52-20-81
**Магнитогорск** (3519)55-03-13
**Москва** (495)268-04-70
**Мурманск** (8152)59-64-93
**Набережные Челны** (8552)20-53-41
**Нижний Новгород** (831)429-08-12
**Новокузнецк** (3843)20-46-81
**Ноябрьск** (3496)41-32-12
**Новосибирск** (383)227-86-73
**Омск** (3812)21-46-40
**Орел** (4862)44-53-42
**Оренбург** (3532)37-68-04
**Пенза** (8412)22-31-16
**Петрозаводск** (8142)55-98-37
**Псков** (8112)59-10-37
**Пермь** (342)205-81-47
**Ростов-на-Дону** (863)308-18-15
**Рязань** (4912)46-61-64
**Самара** (846)206-03-16
**Санкт-Петербург** (812)309-46-40
**Саратов** (845)249-38-78
**Севастополь** (8692)22-31-93
**Саранск** (8342)22-96-24
**Симферополь** (3652)67-13-56
**Смоленск** (4812)29-41-54
**Сочи** (862)225-72-31
**Ставрополь** (8652)20-65-13
**Сургут** (3462)77-98-35
**Сыктывкар** (8212)25-95-17
**Тамбов** (4752)50-40-97
**Тверь** (4822)63-31-35
**Тольятти** (8482)63-91-07
**Томск** (3822)98-41-53
**Тула** (4872)33-79-87
**Тюмень** (3452)66-21-18
**Ульяновск** (8422)24-23-59
**Улан-Удэ** (3012)59-97-51
**Уфа** (347)229-48-12
**Хабаровск** (4212)92-98-04
**Чебоксары** (8352)28-53-07
**Челябинск** (351)202-03-61
**Череповец** (8202)49-02-64
**Чита** (3022)38-34-83
**Якутск** (4112)23-90-97
**Ярославль** (4852)69-52-93

**Россия** +7(495)268-04-70 **Казахстан** +7(727)345-47-04 **Беларусь** +(375)257-127-884 **Узбекистан** +998(71)205-18-59 **Киргизия** +996(312)96-26-47

**https://dold.nt-rt.ru/ || ddo@nt-rt.ru**

# Product range

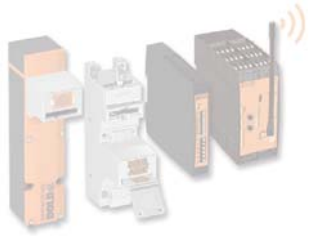

## Safety technique

- Safety switching devices
- Standstill / speed monitoring
- Multifunctional safety devices
- Wireless Safety System
- Safety switches
- Guard locks
- Key transfer

## Monitoring technique

- Residual current monitors
- Insulation monitors
- Insulation fault location system
- Measuring and monitoring relays
- Fault annunciators and fault annunciator systems
- SMS-Telecontrcontrol module

## Power electronics

- Solid-state relays /- contactors
- Reversing contactors
- Softstarters
- Motor brake relays
- Speed and phase controllers
- Multifunctional motor control units

## Control technique

- Latching / interface / switching relays
- Interface modules
- Power supply units
- I / O modules
- CANopen PLC
- CANopen I / O modules

## Time control technique

- Multifunction relays
- Flasher relays
- Cyclic timers
- Fleeting action relays
- Pulse extender
- Star delta timers
- Timers
  - on delayed
  - off delayed

## Installation technique

- Time switches
- Remote switches
- Specific installation electronics

- Machinery and plant
- Power generation/distribution
- Oil and gas industry
- Automation
- Transport and material handling systems
- Rail technology
- Aviation/marine industry
- Paper and printing industry
- Food industry
- Rubber/plastics industry
- Heating and refrigeration
- Automotive
- Mining/metal working
- Chemical/pharmaceutical applications
- Medical technology
- Water/waste water treatment
- Cable cars/ski lifts

… and wherever safety has high priority.
We can cover your industrial applications as well!

# DOLD –
# Solutions for you

The DOLD philosophy, "Our experience. Your safety" constitutes our program: Offering solutions based on over 80 years of experience with a workforce of more than 400 employees, we manufacture high quality products using state-of-the-art production plant at our Furtwangen facility in Germany.

The comprehensive product range includes relay modules, safety relays with positively-driven contacts and electronic housings with virtually unparalleled production detail.
The combination of know-how, innovation and experience makes us one of the leading worldwide manufacturers.

Apart from standard solutions, we are also the right partner when individual industrial solutions with that special touch are required.

Staying in close contact with our customers is very important to us. We listen, analyze and act by offering flexible, custom high-tech solutions, from a single source.

Thanks to our own development laboratory, highly automated production facilities with a modern tool & die shop in addition to injection moulding facility togehter with a well organized sales and marketing department, we guarantee high quality and short delivery times. Your benefits: Increased plant and machine availability, planning reliability and low production costs.

# Table of contents


| Function | Page |
|---|---|

## General

**Product range** ..... 3
**DOLD - Solutions for you** ..... 4
**Table of contents** ..... 7
**Alphabetical index** ..... 8
**Functional index** ..... 10
**Product selection**
- Multifunction relays ..... 11
- Flasher relays ..... 11
- Fleeting action relays / Pulse extender / Star-delta timers ..... 12
- Cycling timers ..... 13
- Timers on delayed ..... 14
- Timers off delayed ..... 15

**Foreword** ..... 16
**General overview of catalogues** ..... 175

### Multifunction relays

**Product selection ..... 11**
Multifunction relays ..... 17

### Flasher relays

**Product selection ..... 11**
Flasher relays ..... 44

### Fleeting action relays / Pulse extender / Star-delta timers

**Product selection ..... 12**
Fleeting action relays ..... 61
Star-delta timers ..... 64

### Cycling timers

**Product selection ..... 13**
Cycling timers ..... 81

### Timers on delayed

**Product selection ..... 14**
Timers on delayed ..... 93

### Timers off delayed

**Product selection ..... 15**
Timers off delayed ..... 139

# Alphabetical index


| Type | Function | Page |
|---|---|---|
| **AA** | | |
| AA 7512 | Timer | 126 |
| AA 7562 | Timer | 166 |
| AA 7610 | Timer | 128 |
| AA 7616 | Timer | 131 |
| AA 7666 | Timer | 168 |
| AA 9906/200 | Timer | 116 |
| **BA** | | |
| BA 7864 | Cyclic timer | 93 |
| BA 7903 | Timer | 134 |
| BA 7905 | Timer | 136 |
| BA 7954 | Timer | 171 |
| BA 7962 | Timer | 173 |
| BA 7981 | Flasher relay | 59 |
| **BC** | | |
| BC 7930N | Timer | 110 |
| BC 7931N | Fleeting action relay | 70 |
| BC 7932N | Flasher relay | 53 |
| BC 7933N | Timer | 151 |
| BC 7934N | Timer | 112 |
| BC 7935N | Multifunction relay | 27 |
| BC 7936N | Star-delta timer | 72 |
| BC 7937N | Cyclic timer | 85 |
| BC 7938N | Timer | 142 |
| BC 7939N | Timer | 153 |
| **EC** | | |
| EC 7610 | Timer | 128 |
| EC 7616 | Timer | 131 |
| EC 7666 | Timer | 168 |
| EC 7801 | Timer | 138 |
| EC 9621 | Timer | 140 |
| **EF** | | |
| EF 7610 | Timer | 128 |
| EF 7616 | Timer | 131 |
| EF 7666 | Timer | 168 |
| **EH** | | |
| EH 7610 | Timer | 128 |
| EH 7616 | Timer | 131 |
| EH 7666 | Timer | 168 |
| **EO** | | |
| EO 7864 | Cyclic timer | 93 |

| Type | Function | Page |
|---|---|---|
| **IK** | | |
| IK 7813 | Timer | 96 |
| IK 7814 | Timer | 99 |
| IK 7815 | Fleeting action relay | 61 |
| IK 7816 | Flasher relay | 44 |
| IK 7817N/200 | Multifunction relay | 17 |
| IK 7818 | Fleeting action relay | 64 |
| IK 7819 | Timer | 142 |
| IK 7820 | Fleeting action relay | 66 |
| IK 7823 | Timer | 145 |
| IK 7825 | Timer | 102 |
| IK 7826 | Fleeting action relay | 68 |
| IK 7827 | Flasher relay | 47 |
| IK 7854 | Cyclic timer | 81 |
| IK 8808 | Timer | 104 |
| IK 9906 | Timer | 106 |
| IK 9962 | Timer | 147 |
| **MK** | | |
| MK 7830N | Multifunction relay, digital | 30 |
| MK 7850N/200 | Multifunction relay | 34 |
| MK 7851 | Flasher relay | 55 |
| MK 7852 | Flasher relay | 57 |
| MK 7853N | Star-delta timer | 74 |
| MK 7854N | Cyclic timer | 88 |
| MK 7858 | Timer | 114 |
| MK 7863 | Timer | 155 |
| MK 7873N | Timer | 157 |
| MK 9906 | Timer | 116 |
| MK 9906N | Timer | 118 |
| MK 9906N/600 | Timer | 122 |
| MK 9908 | Timer | 124 |
| MK 9961 | Timer | 160 |
| MK 9962 | Timer | 173 |
| MK 9962N | Timer | 162 |
| MK 9988 | Fleeting action relay | 77 |
| MK 9989 | Fleeting action relay | 79 |

# Alphabetical index


| Type | Function | Page |
|---|---|---|
| **RK** | | |
| RK 7813 | Timer | 49 |
| RK 7814 | Timer | 49 |
| RK 7815 | Fleeting action relay | 49 |
| RK 7816 | Flasher relay | 49 |
| RK 7817 | Multifunction relay | 23 |
| **SK** | | |
| SK 7813 | Timer | 96 |
| SK 7814 | Timer | 99 |
| SK 7815 | Fleeting action relay | 61 |
| SK 7816 | Flasher relay | 44 |
| SK 7817N/200 | Multifunction relay | 17 |
| SK 7819 | Timer | 142 |
| SK 7820 | Fleeting action relay | 66 |
| SK 7823 | Timer | 145 |
| SK 7854 | Cyclic timer | 81 |
| SK 9906 | Timer | 106 |
| SK 9962 | Timer | 147 |
| **SN** | | |
| SN 7920 | Multifunction relay | 40 |

# Functional index


| Function | Type | Page |
|---|---|---|
| **C** | | |
| Cyclic timer | BA 7864, EO 7864 | 93 |
| Cyclic timer | BC 7937N | 85 |
| Cyclic timer | IK 7854, SK 7854 | 81 |
| Cyclic timer | MK 7854N | 88 |
| **F** | | |
| Flasher relay | BA 7981 | 59 |
| Flasher relay | BC 7932N | 53 |
| Flasher relay | IK 7816, SK 7816 | 44 |
| Flasher relay | IK 7827 | 47 |
| Flasher relay | MK 7851 | 55 |
| Flasher relay | MK 7852 | 57 |
| Flasher relay | RK 7816 | 49 |
| Fleeting action relay | BC 7931N | 70 |
| Fleeting action relay | IK 7815, SK 7815 | 61 |
| Fleeting action relay | IK 7818 | 64 |
| Fleeting action relay | IK 7820, SK 7820 | 66 |
| Fleeting action relay | IK 7826 | 68 |
| Fleeting action relay | MK 9988 | 77 |
| Fleeting action relay | MK 9989 | 79 |
| Fleeting action relay | RK 7815 | 49 |
| **M** | | |
| Multifunction relay | BC 7935N | 27 |
| Multifunction relay | IK 7817N/200, SK 7817N/200 | 17 |
| Multifunction relay | MK 7850N/200 | 34 |
| Multifunction relay | RK 7817 | 23 |
| Multifunction relay | SN 7920 | 40 |
| Multifunction relay, digital | MK 7830N | 30 |
| **S** | | |
| Star-delta timer | BC 7936N | 72 |
| Star-delta timer | MK 7853N | 74 |

| Function | Type | Page |
|---|---|---|
| **T** | | |
| Timer | AA 7512 | 126 |
| Timer | AA 7562 | 166 |
| Timer | AA 7610, EC 7610, EF 7610, EH 7610 | 128 |
| Timer | AA 7616, EC 7616, EF 7616, EH 7616 | 131 |
| Timer | AA 7666, EC 7666, EF 7666, EH 7666 | 168 |
| Timer | BA 7903 | 134 |
| Timer | BA 7905 | 136 |
| Timer | BA 7954, AI 954N | 171 |
| Timer | BA 7962, MK 9962 | 173 |
| Timer | BC 7930N | 110 |
| Timer | BC 7933N | 151 |
| Timer | BC 7934N | 112 |
| Timer | BC 7939N | 153 |
| Timer | EC 7801 | 138 |
| Timer | EC 9621 | 140 |
| Timer | IK 7813, SK 7813 | 96 |
| Timer | IK 7814, SK 7814 | 99 |
| Timer | IK 7819, SK 7819, BC 7938N | 142 |
| Timer | IK 7823, SK 7823 | 145 |
| Timer | IK 7825 | 102 |
| Timer | IK 8808 | 104 |
| Timer | IK 9906, SK 9906 | 106 |
| Timer | IK 9962, SK 9962 | 147 |
| Timer | MK 7858 | 114 |
| Timer | MK 7863 | 155 |
| Timer | MK 7873N | 157 |
| Timer | MK 9906, AA 9906/200 | 116 |
| Timer | MK 9906N | 118 |
| Timer | MK 9906N/600 | 122 |
| Timer | MK 9908 | 124 |
| Timer | MK 9961 | 160 |
| Timer | MK 9962N | 162 |
| Timer | RK 7813, RK 7814, RK 7815, RK 7816 | 49 |

# Product selection

## Multifunction relays

| Function | Time range from ... to [s ... h] | Nominal voltage AC | Nominal voltage AC | Nominal voltage AC/DC | Output contacts | Enclosure design | Width [mm] | Type | Page |
|---|---|---|---|---|---|---|---|---|---|
| **Multifunction relay** | 0,02 ... 300 | | | + | 1 C/O | Distribution board | 17,5 | **IK 7817N/200** | 17 |
| **Multifunction relay** | 0,02 ... 300 | + | + | + | 1 C/O; 2 C/O | Distribution board | 17,5 | **RK 7817** | 23 |
| **Multifunction relay** | 0,02 ... 300 | | | + | 1 C/O | Switch cabinet | 17,5 | **SK 7817N/200** | 17 |
| **Multifunction relay** | 0,05 ... 300 | | + | + | 1 C/O | Switch cabinet | 22,5 | **BC 7935N** | 27 |
| **Multifunction relay, digital** | 0,02 ... 9999 | + | | + | 1 C/O; 2 C/O | Switch cabinet | 22,5 | **MK 7830N** | 30 |
| **Multifunction relay** | 0,02 ... 300 | | | + | 2 C/O | Switch cabinet | 22,5 | **MK 7850N/200** | 34 |
| **Multifunction relay** | 0,05 ... 300 | | | + | 2 x 2 NO; 2 NC | Switch cabinet | 52,5 | **SN 7920** | 40 |

NC= normally closed contact, NO = normally open contact, C/O = changeover contact

## Flasher relays

| Function | Time range from ... to [s ... h] | Time range from ... to [s ... min] | Time range from ... to [s ... s] | Nominal voltage AC | Nominal voltage DC | Nominal voltage AC/DC | Output contacts | Enclosure design | Width [mm] | Type | Page |
|---|---|---|---|---|---|---|---|---|---|---|---|
| **Flasher relay** | | 0,1 ... 60 | | + | | + | 1 C/O | Distribution board | 17,5 | **IK 7816** | 44 |
| **Flasher relay** | | | 0,05 ... 100 | + | + | | 1 C/O | Distribution board | 17,5 | **IK 7827** | 47 |
| **Flasher relay** | 0,1 ... 10 | | | + | | + | 1 C/O; 2 C/O | Distribution board | 17,5 | **RK 7816** | 49 |
| **Flasher relay** | | 0,1 ... 60 | | + | | + | 1 C/O | Switch cabinet | 17,5 | **SK 7816** | 44 |
| **Flasher relay** | | | 0,5 ... 100 | + | | + | 1 C/O | Switch cabinet | 22,5 | **BC 7932N** | 53 |
| **Flasher relay** | | | 0,05 ... 300 | + | | + | 2 C/O | Switch cabinet | 22,5 | **MK 7851** | 55 |
| **Flasher relay** | | | 0,5 | + | | + | 1 C/O; 2 C/O | Switch cabinet | 22,5 | **MK 7852** | 57 |
| **Flasher relay** | | | 0,3 ... 3 | + | + | | 1 C/O; 2 C/O | Switch cabinet | 45 | **BA 7981** | 59 |

C/O = changeover contact

## Product selection

### Fleeting action relays / Pulse extender / Star delta timer

| Function | Time range from ... to [s ... h] | Time range from ... to [s ... min] | Time range from ... to [s ... s] | Nominal voltage AC | Nominal voltage DC | Nominal voltage AC/DC | Output contacts | Enclosure design | Width [mm] | Type | Page |
|---|---|---|---|---|---|---|---|---|---|---|---|
| **Fleeting action relay** | | 0,1 ... 60 | | + | | + | 1 C/O | Distribution board | 17,5 | **IK 7815** | 61 |
| **Star-delta timer** | | | 0,5 ... 100 | + | | + | 2 NO | Distribution board | 17,5 | **IK 7818** | 64 |
| **Fleeting action relay** | | | 0,25 ... 640 | + | | + | 1 C/O | Distribution board | 17,5 | **IK 7820** | 66 |
| **Fleeting action relay** | | | 0,05 ... 1 | + | + | | 1 C/O | Distribution board | 17,5 | **IK 7826** | 68 |
| **Fleeting action relay** | 0,1 ... 10 | | | + | | + | 1 C/O; 2 C/O | Distribution board | 17,5 | **RK 7815** | 49 |
| **Fleeting action relay** | | 0,1 ... 60 | | + | | + | 1 C/O | Switch cabinet | 17,5 | **SK 7815** | 61 |
| **Fleeting action relay** | | | 0,25 ... 640 | + | | + | 1 C/O | Switch cabinet | 17,5 | **SK 7820** | 66 |
| **Fleeting action relay** | | | 0,05 ... 100 | + | | + | 1 C/O | Switch cabinet | 22,5 | **BC 7931N** | 70 |
| **Star-delta timer** | | | 0,5 ... 100 | + | | + | 2 NO | Switch cabinet | 22,5 | **BC 7936N** | 72 |
| **Star-delta timer** | | | 0,5 ... 100 | + | | + | 1 FM; 1 NO | Switch cabinet | 22,5 | **MK 7853N** | 74 |
| **Fleeting action relay** | | | 0,3 ... 0,6 | + | | + | 1 C/O; 2 C/O | Switch cabinet | 22,5 | **MK 9988** | 77 |
| **Fleeting action relay** | | | 0,05 ... 300 | + | | + | 2 C/O | Switch cabinet | 22,5 | **MK 9989** | 79 |

NC= normally closed contact, NO = normally open contact, C/O = changeover contact, FM = contact fleeting on make

# Product selection

## Cyclic timers

| Function | Time range from ... to [s ... h] | Nominal voltage AC | Nominal voltage DC | Nominal voltage AC/DC | Output contacts | Enclosure design | Width [mm] | Type | Page |
|---|---|---|---|---|---|---|---|---|---|
| **Cyclic timer** | 0,05 ... 300 | | | + | 1 C/O | Distribution board | 17,5 | **IK 7854** | 81 |
| **Cyclic timer** | 0,05 ... 300 | | | + | 1 C/O | Switch cabinet | 17,5 | **SK 7854** | 81 |
| **Cyclic timer** | 0,05 ... 300 | | + | + | 1 C/O | Switch cabinet | 22,5 | **BC 7937N** | 85 |
| **Cyclic timer** | 0,05 ... 300 | | | + | 2 C/O | Switch cabinet | 22,5 | **MK 7854N** | 88 |
| **Cyclic timer** | 0,25 ... 32 | + | | + | 1 C/O; 2 C/O | Switch cabinet | 35 | **EO 7864** | 93 |
| **Cyclic timer** | 0,25 ... 32 | + | | + | 1 C/O; 2 C/O | Switch cabinet | 45 | **BA 7864** | 93 |

C/O = changeover contact

# Product selection

## Timers on delayed

| Function | Time range from ... to [s ... h] | Time range from ... to [s ... min] | Time range from ... to [s ... s] | Nominal voltage AC | Nominal voltage DC | Nominal voltage AC/DC | Output contacts | Enclosure design | Width [mm] | Type | Page |
|---|---|---|---|---|---|---|---|---|---|---|---|
| **Timer** | | 0,1 ... 60 | | + | | + | 1 C/O | Distribution board | 17,5 | **IK 7813** | 96 |
| **Timer** | | 0,25 ... 640 | | + | | + | 1 C/O | Distribution board | 17,5 | **IK 7814** | 99 |
| **Timer** | | 0,05 ... 60 | | + | + | | 1 C/O; 2 C/O | Distribution board | 17,5 | **IK 7825** | 102 |
| **Timer** | | | 0,06 ... 160 | | | + | 1 Ty | Distribution board | 17,5 | **IK 8808** | 104 |
| **Timer** | 0,05 ... 300 | | | | | + | 1 w | Distribution board | 17,5 | **IK 9906** | 106 |
| **Timer** | 0,1 ... 10 | | | + | | + | 1 C/O; 2 C/O | Distribution board | 17,5 | **RK 7813** | 49 |
| **Timer** | 0,1 ... 10 | | | + | | + | 1 C/O; 2 C/O | Distribution board | 17,5 | **RK 7814** | 49 |
| **Timer** | | 0,1 ... 60 | | + | | + | 1 C/O | Switch cabinet | 17,5 | **SK 7813** | 96 |
| **Timer** | | 0,25 ... 640 | | + | | + | 1 C/O | Switch cabinet | 17,5 | **SK 7814** | 99 |
| **Timer** | 0,05 ... 300 | | | | | + | 1 C/O | Switch cabinet | 17,5 | **SK 9906** | 106 |
| **Timer** | 0,05 ... 10 | | | + | | + | 1 C/O | Switch cabinet | 22,5 | **BC 7930N** | 110 |
| **Timer** | 0,05 ... 16 | | | + | | + | 1 C/O | Switch cabinet | 22,5 | **BC 7934N** | 112 |
| **Timer** | | 0,25 ... 640 | | + | | + | 2 C/O | Switch cabinet | 22,5 | **MK 7858** | 114 |
| **Timer** | 0,05 ... 100 | | | + | | + | 2 C/O | Switch cabinet | 22,5 | **MK 9906** | 116 |
| **Timer** | 0,05 ... 300 | | | | | + | 2 C/O | Switch cabinet | 22,5 | **MK 9906N** | 118 |
| **Timer** | 0,05 ... 100 | | | + | | + | 2 C/O | Switch cabinet | 22,5 | **MK 9906N/600** | 122 |
| **Timer** | | | 0,05 ... 300 | + | + | | 2 C/O | Switch cabinet | 22,5 | **MK 9908** | 124 |
| **Timer** | | | 0,2 ... 180 | + | + | | 2 C/O | Switch cabinet | 45 | **AA 7512** | 126 |
| **Timer** | 0,2 ... 60 | | | + | | | 1 NO, 1 NC | Switch cabinet | 45 | **AA 7610** | 128 |
| **Timer** | 0,15 ... 60 | | | + | | | 2 NO, 2 NC | Switch cabinet | 45 | **AA 7616** | 131 |
| **Timer** | 0,05 ... 100 | | | | | + | 2 C/O | Switch cabinet | 45 | **AA 9906/200** | 116 |
| **Timer** | | | 0,05 ... 100 | + | + | | 1 C/O; 2 C/O | Switch cabinet | 45 | **BA 7903** | 134 |
| **Timer** | | | 0,05 ... 300 | + | + | | 1 C/O; 2 C/O | Switch cabinet | 45 | **BA 7905** | 136 |
| **Timer** | 0,2 ... 60 | | | + | | | 1 NO, 1 NC | Front panel mounting | 48 | **EC 7610** | 128 |
| **Timer** | 0,15 ... 60 | | | + | | | 2 C/O | Front panel mounting | 48 | **EC 7616** | 131 |
| **Timer** | | 0,01 ... 9999 | | + | + | | 1 C/O; 2 C/O | Front panel mounting | 48 | **EC 7801** | 138 |
| **Timer** | 0,01 ... 99,99 | | | + | + | | 1 C/O; 2 C/O; 1 T | Front panel mounting | 48 | **EC 9621** | 140 |
| **Timer** | 0,2 ... 60 | | | + | | | 2 NO, 2 NC | Front panel mounting | 72 | **EF 7610** | 128 |
| **Timer** | 0,15 ... 60 | | | + | | | 2 NO, 2 NC | Front panel mounting | 72 | **EF 7616** | 131 |
| **Timer** | 0,2 ... 60 | | | + | | | 1 NO, 1 NC | Front panel mounting | 96 | **EH 7610** | 128 |
| **Timer** | 0,15 ... 60 | | | + | + | | 2 NO, 2 NC | Front panel mounting | 96 | **EH 7616** | 131 |

NC= normally closed contact, NO = normally open contact, C/O = changeover contact, FM = contact fleeting on make, Ty = thyristor, T = transistor output

## Product selection

### Timers off delayed

| Function | Release delay | Time range from ... to [s ... h] | Time range from ... to [s ... min] | Time range from ... to [s ... s] | Nominal voltage AC | Nominal voltage DC | Nominal voltage AC/DC | Output contacts | Enclosure design | Width [mm] | Type | Page |
|---|---|---|---|---|---|---|---|---|---|---|---|---|
| **Timer** | without control signal | | | 0,05 ... 300 | | | + | 1 C/O | Distribution board | 17,5 | **IK 7819** | 142 |
| **Timer** | with control signal | | 0,25 ... 640 | | + | | + | 1 C/O | Distribution board | 17,5 | **IK 7823** | 145 |
| **Timer** | with control signal | 0,05 ... 300 | | | | | + | 1 C/O | Distribution board | 17,5 | **IK 9962** | 147 |
| **Timer** | without control signal | | | 0,05 ... 300 | | | + | 1 C/O | Switch cabinet | 17,5 | **SK 7819** | 142 |
| **Timer** | with control signal | | 0,25 ... 640 | | + | | + | 1 C/O | Switch cabinet | 17,5 | **SK 7823** | 145 |
| **Timer** | with control signal | 0,05 ... 300 | | | | | + | 1 C/O | Switch cabinet | 17,5 | **SK 9962** | 147 |
| **Timer** | with control signal | 0,05 ...10 | | | + | + | + | 1 C/O | Switch cabinet | 22,5 | **BC 7933N** | 151 |
| **Timer** | without control signal | | | 0,05 ... 300 | | | + | 1 C/O | Switch cabinet | 22,5 | **BC 7938N** | 142 |
| **Timer** | with control signal | 0,05 ... 16 | | | + | + | + | 1 C/O | Switch cabinet | 22,5 | **BC 7939N** | 153 |
| **Timer** | without control signal | | | 0,05 ... 300 | + | | + | 1 C/O | Switch cabinet | 22,5 | **MK 7863** | 155 |
| **Timer** | without control signal | | | 0,05 ... 300 | | | + | 2 C/O | Switch cabinet | 22,5 | **MK 7873N** | 157 |
| **Timer** | without control signal | | | 0,05 ... 600 | + | | + | 1 C/O | Switch cabinet | 22,5 | **MK 9961** | 160 |
| **Timer** | with control signal | 0,05 ... 100 | | | + | | + | 2 C/O | Switch cabinet | 22,5 | **MK 9962** | 173 |
| **Timer** | with control signal | 0,05 ... 300 | | | | | + | 2 C/O | Switch cabinet | 22,5 | **MK 9962N** | 162 |
| **Timer** | without control signal | | | 0,2 ... 180 | + | + | | 2 C/O | Switch cabinet | 45 | **AA 7562** | 166 |
| **Timer** | with control signal | 0,15 ... 60 | | | + | | | 1 NO, 1 NC | Switch cabinet | 45 | **AA 7666** | 168 |
| **Timer** | without control signal | | | 0,05 ... 300 | + | + | | 2 C/O | Switch cabinet | 45 | **BA 7954** | 171 |
| **Timer** | with control signal | 0,05 ... 100 | | | + | + | | 2 C/O | Switch cabinet | 45 | **BA 7962** | 173 |
| **Timer** | with control signal | 0,15 ... 60 | | | + | | | 1 NO, 1 NC | Front panel mounting | 48 | **EC 7666** | 168 |
| **Timer** | with control signal | 0,15 ... 60 | | | + | | | 1 NO, 1 NC | Front panel mounting | 72 | **EF 7666** | 168 |
| **Timer** | with control signal | 0,15 ... 60 | | | + | + | | 2 C/O | Front panel mounting | 96 | **EH 7666** | 168 |

NC= normally closed contact, NO = normally open contact, C/O = changeover contact

**Advantages of DOLD time control units**

- A timing relay is a special relay variant which can be used to realize specific timing functions in a cost-effective manner.
- Electronic timing relays with semiconductor outputs for frequent wearless switching
- Easy and cost-effective stockkeeping because of only a single device (multifunctional relays)
- Save space by narrow design
- Elapsed time indication for electromechanical timing relays
- Non-resetting on voltage failure designs for electromechanical timing relays

**Technology**

Timing relays are available as electropneumatic, electromechanical and electronic design.
Electropneumatic and electromechanical timing relays work with conventional relay contacts. Electronic timing relays work with conventional relay contacts or with solid-state relays.

**Functions**

- **Delay on operate:**
  Initiation is by applying the operating voltage. Once the set delay time has lapsed the relay switches to its operated condition.
- **Release delay:**
  When the operating voltage is applied the relay immediately switches to its operated condition. When the operating voltage is interrupted, the release delay time starts. Once the set delay time has lapsed the relay switches to its normal position.
  There is a distinction between devices without and such with control signal:
  Devices without auxiliary voltage can only be realized for short times (up to 5 minutes). Devices with auxiliary supply are also suited for longer time range. Here, the delay function is intiated by operation of the control input. These products are also suited for applications with very short operating times.
- **Flasher timers:**
  When the operating voltage is applied the relay switches to its operated condition (on the lead edge of the pulse). Once the pulse time has lapsed the relay switches to its normal position. After the end of the dead time it returns to its operated condition and so on (pulse time = dead time).
- **Cyclic timers:**
  Same functions as the flasher timer, but pulse time and dead time are different and therefore they can be separately adjusted.
- **Fleeting action:**
  A fleeting action NO relay switches to its operated condition without delay when the operating voltage is applied. Once the set fleeting time has lapsed the relay switches to its normal position. A fleeting action NC relay has voltage applied to the control input via the control contact. When the control contact is opened the relay immediately switches to its operated condition. Once the set fleeting time has lapsed the relay switches to its normal position.
- **Pulse shapers:**
  Convert the input pulse to an output pulse with a defined length (set time).
- **Multifunction relays:**
  These devices can be used for each one of the above functions. Needed functions can be adjusted on the device.
- **Star delta timers:**
  The star contact is closed when the operating voltage is applied. Once the set fleeting time has lapsed the star contact opens and after a short dead time (contact transit time 35 to 100 ms) the delta contact closes.

**For MK9906N, MK 9962N, MK 7854N, MK 7850N and IK/SK 9906, IK/SK 9962, IK/SK 7854, IK/SK 7817N:**

- Voltage range AC/DC 12-240 V
- 8 time ranges from 0.05 s - 300 h
- Setting aid for quick setting of long times
- LEDs for ready-for-operation, contact position, time sequence
- Optionally with timing interruption/time addition and with connection to a remote potentiometer
- Optionally 1 changeover contact programmable as instantaneous contact (for MK....N models with the exception MK 9962N)

**Applications**

- **Delay on operate:**
  Lead timing circuits (e.g. preheating); delay times in control systems: delayed starting of plant components, e.g. starting of slipring motors (switching starting resistors), burner controls, escalators, elevators
- **Release delay:**
  After-run timing, e.g. fans, lighting controls, staircase lighting, minute lighting, delayed switching to emergency generating set/lighting
  Without auxiliary voltage: used for release times < 5 minutes
  With auxiliary voltage: used for release times > 5 minutes and for very short operating times
- **Flasher timers:**
  trigger fault indicators or navigation lights, for example: flashing lights on cranes, wind parks, airport lighting systems
- **Cyclic timers:**
  traffic light control systems, automatic baking machines
- **Fleeting action**
  Fleeting NO timers: dosing systems, washing facilities
  Fleeting NC timers:
- **Pulse shapers:**
  in switch cabinets, for example: setting the length of different signals
- **Multifunction relays:**
  versatile by function selection
- **Star delta timers:**
  automatic starting control for motors, for example

# MULTITIMER
## Multifunction Relay
## IK 7817N/200, SK 7817N/200

0239763

IK 7817N/500 SK 7817N/500

### Circuit Diagrams

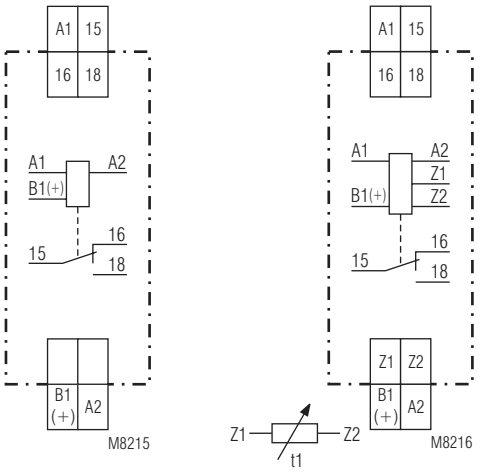


IK 7817N.81/200
SK 7817N.81/200

IK 7817N.81/500
SK 7817N.81/500

- According to IEC/EN 61 812-1
- 8 functions settable via rotational switch:
  - Delay on energisation (AV)
  - Fleeting on make (EW)
  - Delay pulse (IE)
  - Flasher, start with pulse (BI)
  - Delay on de-energisation (RV)
  - Pulse forming function (IF)
  - Fleeting on break (AW)
  - Delay on energisation and de-energisation (AV / RV)
- 8 time ranges from 0.02 s ... 300 h selectable via rotational switches
- Voltage range AC/DC 12 ... 240 V
- With time interruption / time adding input
- Adjustment aid for quick setting of long time values
- Suitable for 2-wire proximity sensor control
- 1 changeover contact
- LED indicators for operation, contact position and time delay
- Devices available in 2 enclosure versions:
  IK 7817N: depth 59 mm, with terminals at the bottom for installation systems and industrial distribution systems according to DIN 43 880
  SK 7817N: depth 98 mm, with terminals at the top for cabinets with mounting plate and cable duct
- DIN rail or screw mounting
- 17.5 mm width

IK/SK 7817N/500: as IK/SK 7817N/200 but with
- 2 additional functions:
  - Cyclic timer, start with break (TP)
  - Fleeting on make and break (EW / AW)
- second time setting t2 for functions
  - Cyclic timer, start with pulse (TI) or break (TP), based on the separate setting of pulse and break time the flasher function can be used as cyclic timer.
  - Fleeting on make and break (EW/AW)
  - Delay on energisation and de-energisation (AV / RV)
  - Delay pulse (IE): setting of pulse length
- Connection facility for external potentiometer 10 kΩ

### Approvals and Markings

CE

### Connection Terminals

| Terminal designation | Signal description |
|---|---|
| A1 | L / + |
| A2 | N / - |
| B1(+) | Control input (different function depending on chosen timing function) control with reference to A2 |
| 15, 16, 18 | Changeover contact |
| Z1, Z2 (only at variant /500) | Input to connect a remote potentiometer for time setting t1 |

### Application

Time dependent controls for industrial and railway applications.

### Indicators

| | |
|---|---|
| green LED: | on, when voltage connected |
| yellow LED "R/t": | shows status of output relay and time delay: |
| - Continuously off: | output relay not active; no time delay |
| - Continuously on: | output relay active; no time delay |
| - Flashing (short on, long off) | output relay not active; time delay |
| - Flashing (long on, short off) | output relay active; time delay |

### Notes

**Control of A1-A2 with proximity sensors**
The input can be controlled by DC 3 wire or AC/DC 2 wire proximity sensors. For operating voltage > 24 V and usage of sensors without built-in short circuit protection a protection resistor on A1 is recommendend to reduce the inrush current. The dimension is as follows:

$R_v \approx$ operating voltage / max. switching current of sensor

The series resistor must not be selected higher than necessary.
Max. values are:

| | | | | | |
|---|---|---|---|---|---|
| Operating voltage: | 48 V | 60 V | 110 V | 230 V | |
| Series resistor $R_v$ max: | 270 Ω | 390 Ω | 680 Ω | 1.8 kΩ | (1 W) |

## Function Diagram

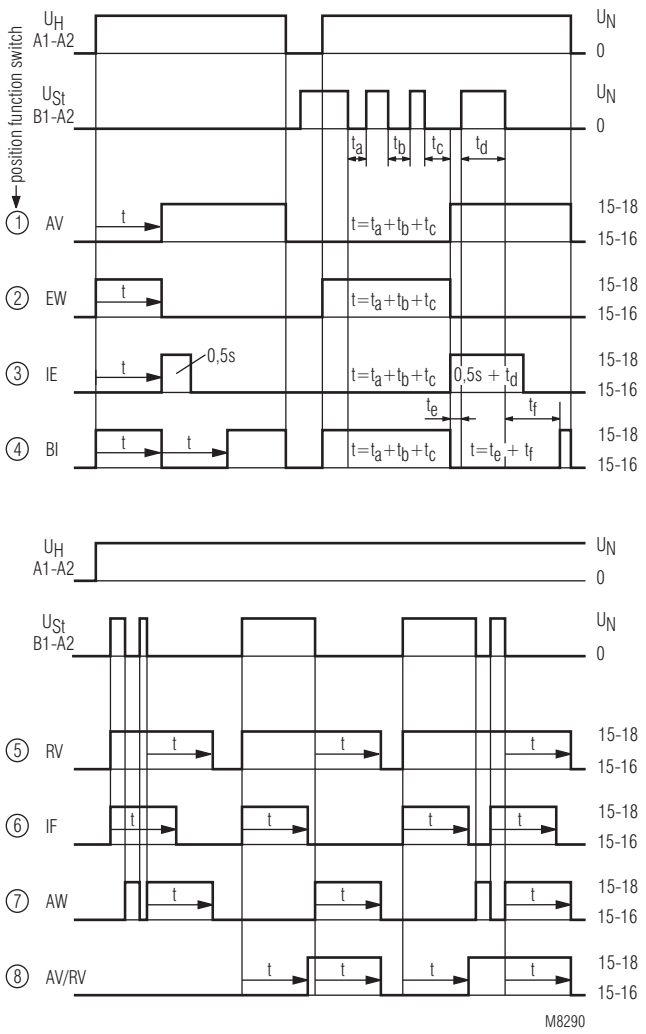


IK 7817N/200, SK 7817N/200

① ... ⑧ = position of function switch

① AV = Delay on energisation
② EW = Fleeting on make
③ IE = Delayed pulse
④ BI = Flasher, start with pulse
⑤ RV = Delay on de-energisation
⑥ IF = Pulse forming function
⑦ AW = Fleeting on break
⑧ AV/RV = Delay on energisation and de-energisation

## Function Diagram

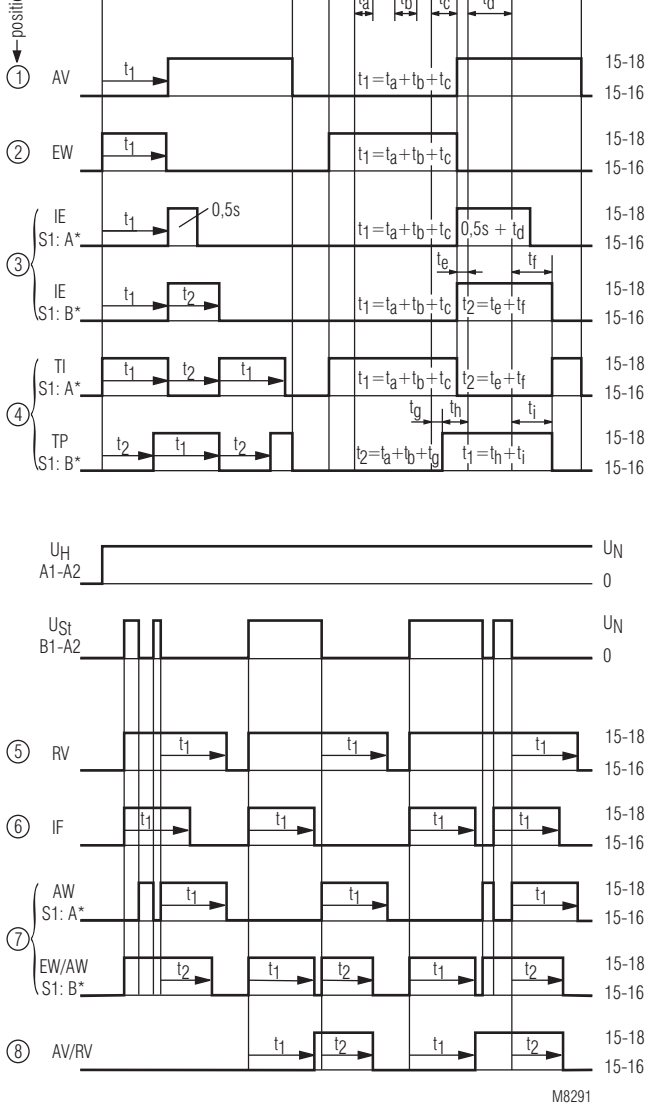


*) A and B indicate the position of function slide switch S1

IK 7817N/500, SK 7817N/500

① ... ⑧ = position of function switch

① AV = Delay on energisation
② EW = Fleeting on make
③ IE = Delay pulse
S1 in position A:
t1: adjustable, t2 = 0.5 s fixed
S1 in position B:
t1 and t2 adjustable
④ TI = Cyclic timer, start with pulse
S1 in position A
TP = Cyclic timer, start with break
S1 in position B
⑤ RV = Delay on de-energisation
⑥ IF = Pulse forming function
⑦ AW = Fleeting on break
S1 in position A
EW/AW = Fleeting on make and break
S1 in position B
⑧ AV/RV = Delay on energisation and de-energisation

## Notes

**Setting**
If the function switch is altered during operation, the new setting is valid immediately (like a restart of the relay).
A new adjustment of the time or time range is also immediately valid.
Please note, that a change of function, time range or time setting during elapse of time can lead to unintended switching of the output contacts.

**Adjustment assistance**
The flashing period of the yellow LED is 1 s ± 4 % and can be used to adjust the time. Especially on the lower end of scale and for long times it is suitable as the multiplication factors between the different time ranges are exact without tolerance.
Example:
The required time is 40 min. It has to be adjusted within range 3 ... 300 min. The time check takes too long as several timing cycles would be necessary for a precise value. For faster adjustment the setting is made to 0.03 ... 3 min. On this range the potentiometer should be set to 0.4 min (= 24 sec.). With the right potentiometer setting the LED must show 24 flashing cycles. After that the time range is switched over to 3 ... 300 min. and the setting is complete.

**Time interruption / time adding**
With the functions AV, EW, IE and BI the time delay can be interrupted by controlling input B1 (+) with control voltage. Removing the control signal will continue the timing cycle (time addition).

**Control input B1**
The functions RV, IF, AW, AV / RV have to be controlled via input B1 (+) with voltage against A2. The control signal could be the same as the auxiliary/control voltage of A1 or any other voltage between 12 and 240 V AC or DC. Operating a parallel load between B1 and A2 is also possible.

If with function IF the inputs A1 and B1 are contolled simultaneously a pulse with the adjusted length is started.
With the variant IK/SK 7817N/500 the output pulse can be disabled by setting the slide switch in positon "B".

**Remote potentiometer**
The setting of t1 on variant IK/SK 7817N/500 can also be made by a remote potentiometer of 10 kOhms. The connection is made via Z1-Z2. When connecting a remote potentiometer the rotational switch for t1 has to be set to min. If no remote potentiometer is required the terminals Z1-Z2 have to be linked.
The wires to the remote potentiometer should be installed separately from the lines with mains voltage. If this is not possible, a screened cable is recommendet where the shield is connected to Z1.
To terminals Z1 and Z2 no external voltage must be connected, as the unit might be damaged.
Terminals Z1-Z2 do not have a galvanic separation to terminals A1 -A2!

**Additional function**
With the variant IK/SK 7817N/500 additional features can be selected for the functions position 3, 4 and 7 using the slide switch S1 on the relay front in position "B". At the same time a second time setting t2 is available on the lower rotational switch for the functions 3, 4 , 7 and 8 (see function Diagram). The time range is the same as for t1.

## Setting

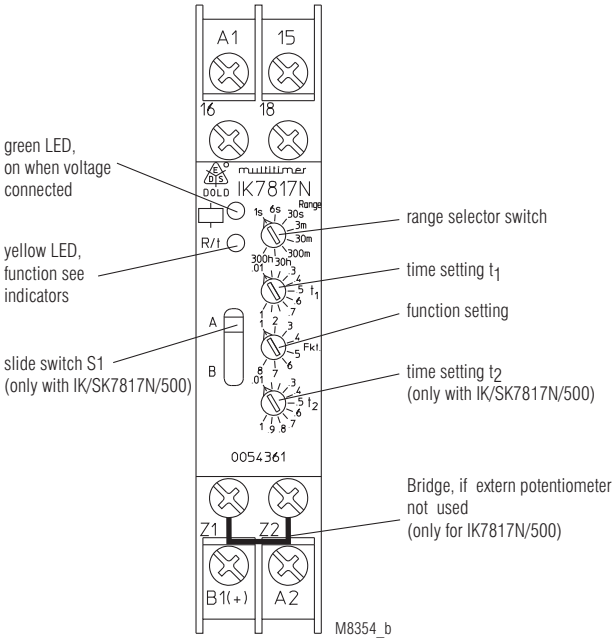


**Attention**
If no remote potentiometer at IK/SK 7817N/500 is required the terminals Z1-Z2 have to be linked.

## Technical Data

### Time circuit

| | |
|---|---|
| **Time ranges:** | 8 time ranges in one unit, settable via rotational switch<br>0.02 ... 1 s  0.3 ... 30 min<br>0.06 ... 6 s  3 ... 300 min<br>0.3 ... 30 s  0.3 ... 30 h<br>0.03 ... 3 min  3 ... 300 h |
| **Time setting t1, t2:** | continuous, 1:100 on relative scale (t2 only at IK/SK 7817N/500) |
| **Recovery time:** | |
| at DC 24 V: | approx. 15 ms |
| at DC 240 V: | approx. 50 ms |
| at AC 230 V: | approx. 80 ms |
| **Repeat accuracy:** | ± 0.5 % of selected end of scale value + 20 ms |
| **Voltage and temperature influence:** | < 1 % with the complete operating range |

### Input

| | |
|---|---|
| **Nominal voltage $U_N$:** | AC/DC 12 ... 240 V |
| **Voltage range:** | 0.8 ... 1.1 $U_N$ |
| **Release voltage (A1/A2)** | |
| AC 50 Hz: | approx. 7.5 V |
| DC: | approx. 7 V |
| **Max. permitted residual current with 2-wire proximity sensor control (A1-A2)** | |
| up to AC/DC 150 V: | AC resp. DC 5 mA |
| up to AC/DC 264 V: | AC resp. DC 3 mA |
| **Control current B1:** | input resistance approx. 220 kΩ in series with diode |
| **Min. on/off time of control input B1(+):** | |
| AC 50 Hz: | approx. 15 ms / approx. 60 ms |
| DC: | approx. 5 ms / approx. 60 ms |
| **Release voltage (B1/A2)** | |
| AC 50 Hz: | approx. 5 V |
| DC: | approx. 4 V |
| **Nominal power consumption** | |
| AC 12 V: | approx. 1.5 VA |
| AC 24 V: | approx. 2 VA |
| AC 240 V: | approx. 3 VA |
| DC 12 V: | approx. 1 W |
| DC 24 V: | approx. 1 W |
| DC 240 V: | approx. 1 W |
| **Nominal frequency:** | 45 ... 400 Hz |

### Output

| | | |
|---|---|---|
| **Contacts**: | 1 changeover contact | |
| **Contact material:** | AgNi | |
| **Measured nominal voltage:** | AC 250 V | |
| **Thermal current $I_{th}$:** | max. 4 A (see see quadratic total current limit curve) | |
| **Switching capacity** | | |
| to AC 15 | | |
| NO contact: | 3 A / AC 230 V | IEC/EN 60 947-5-1 |
| NC contact: | 1 A / AC 230 V | IEC/EN 60 947-5-1 |
| to DC 13 at 0.1 Hz: | 1 A / DC 24 V | IEC/EN 60 947-5-1 |
| **Electrical life** | | |
| to AC 15 at 1 A, AC 230 V: | 1.5 x $10^5$ switch. cycles | IEC/EN 60 947-5-1 |
| **Permissible switching frequency** | 36 000 switching cycles / h | |
| **Short circuit strength max. fuse rating:** | 4 A gL | IEC/EN 60 947-5-1 |
| **Mechanical life:** | ≥ 30 x $10^6$ switching cycles | |

## Technical Data

### General Data

| | | |
|---|---|---|
| **Operating mode:** | Continuous operation | |
| **Temperature range:** | | |
| Operation: | - 40 ... + 60 °C (higher temperature with limitations see quadratic total current limit curve) | |
| Storage: | - 40 ... + 70 °C | |
| **Relative air humidity:** | 93 % at 40 °C | |
| **Altitude:** | < 2.000 m | |
| **Clearance and creepage distances** | | |
| rated impulse voltage / pollution degree: | 4 kV / 2 (basis insulation) | IEC 60 664-1 |
| Overvoltage category: | III | |
| Insulation test voltage, type test: | 2.5 kV; 1 min | |
| **EMC** | | |
| Electrostatic discharge: | 8 kV (air) | IEC/EN 61 000-4-2 |
| HF-irradiation | | |
| 80 MHz ... 1 GHz: | 20 V / m | IEC/EN 61 000-4-3 |
| 1 GHz ... 2.7 GHz: | 10 V / m | IEC/EN 61 000-4-3 |
| Fast transients: | 4 kV | IEC/EN 61 000-4-4 |
| Surge voltages between wires for power supply: | 2 kV | IEC/EN 61 000-4-5 |
| between wire and ground: | 4 kV | IEC/EN 61 000-4-5 |
| HF-wire guided: | 10 V | IEC/EN 61 000-4-6 |
| Interference suppression: | Limit value class B | EN 55011 |
| **Degree of protection** | | |
| Housing: | IP 40 | IEC/EN 60 529 |
| Terminals: | IP 20 | IEC/EN 60 529 |
| **Housing:** | Thermoplastic with V0 behaviour according to UL subject 94 | |
| **Vibration resistance:** | Amplitude 0.35 mm, frequency 10 ... 55 Hz, | IEC/EN 60 068-2-6 |
| **Climate resistance:** | 40 / 060 / 04 | IEC/EN 60 068-1 |
| **Terminal designation:** | EN 50 005 | |
| **Wire connection:** | DIN 46 228/-1/-2/-3/-4 | |
| Cross section: | 2 x 2,5 $mm^2$ solid or 2 x 1,5 $mm^2$ stranded wire with sleeve | |
| Stripping length: | 10 mm | |
| **Wire fixing:** | Flat terminals with self-lifting clamping piece | IEC/EN 60 999-1 |
| **Fixing torque:** | 0.8 Nm | |
| **Mounting:** | DIN rail mounting (IEC/EN 60715) or screw mounting M4, 90 mm hole pattern, with additional clip available as accessory | |
| **Weight:** | | |
| IK 7817N/200: | approx. 65 g | |
| SK 7817N/200: | approx. 84 g | |

### Dimensions

| | |
|---|---|
| **Width x height x depth:** | |
| IK 7817N/200: | 17.5 x 90 x 59 mm |
| SK 7817N/200: | 17.5 x 90 x 98 mm |

### Classification to DIN EN 50155

| | | |
|---|---|---|
| **Vibration and shock resistance:** | Category 1, Class B | IEC/EN 61 373 |
| **Ambient temperature:** | T1, T2 compliant<br>T3 and TX with operational limitations | |
| **Protective coating of the PCB:** | No | |

## Standard Type

IK 7817N.81/200 AC/DC 12 ... 240 V
Article number: 0054359
- Output: 1 changeover contact
- Nominal voltage $U_N$: AC/DC 12 ... 240 V
- Time ranges: from 0.02 s ... 300 h
- Width: 17.5 mm

SK 7817N.81/200 AC/DC 12 ... 240 V
Article number: 0058364
- Output: 1 changeover contact
- Nominal voltage $U_N$: AC/DC 12 ... 240 V
- Time ranges: from 0.02 s ... 300 h
- Width: 17.5 mm

## Variant

IK/SK 7817N.81/500: With 2 additional functions selectable via slide switch S1:
- Cyclic timer, start with break (TP)
- Fleeting on make and break (EW/AW) second time setting t2, connection facility for remote potentiometer 10 kΩ (t1)

### Ordering example for variant

IK 7817N .81 /_ _ _ AC/DC 12 ... 240 V

- Nominal voltage
- Variant
- Contacts
- Type

## Characteristics

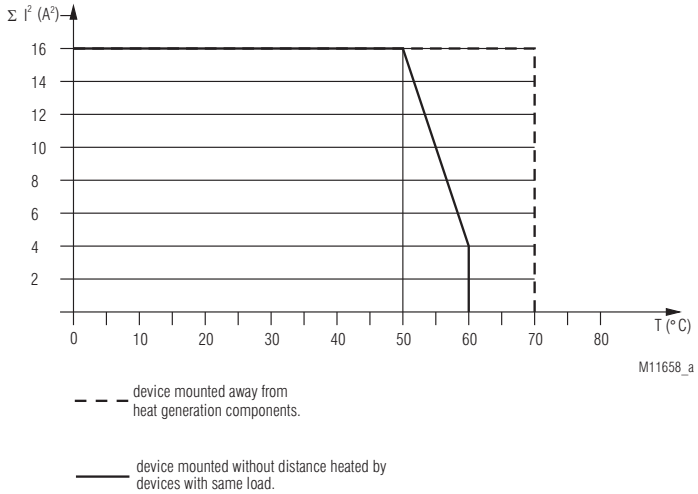


## Accessories

AD 3: External potentiometer 10 kΩ
Article number: 0028962

The external potentiometer is used for remote setting of the time delay. The internal potentiometer of the timer must be set to min. time delay.

Degree of protection
front side: IP 60

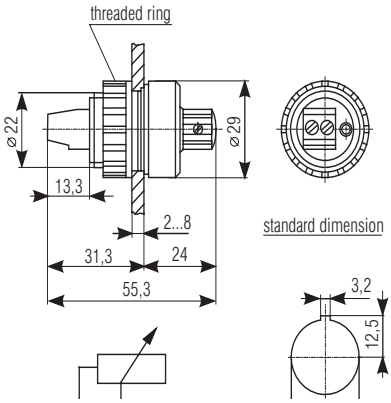


ET 4086-0-2: Additional clip for screw mounting
Article number: 0046578

## Connection Examples

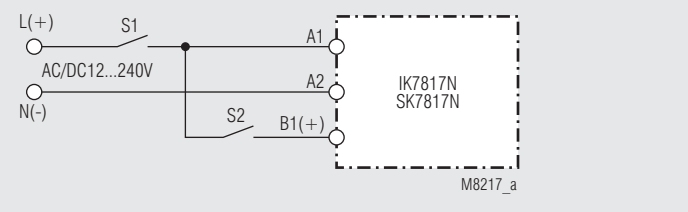


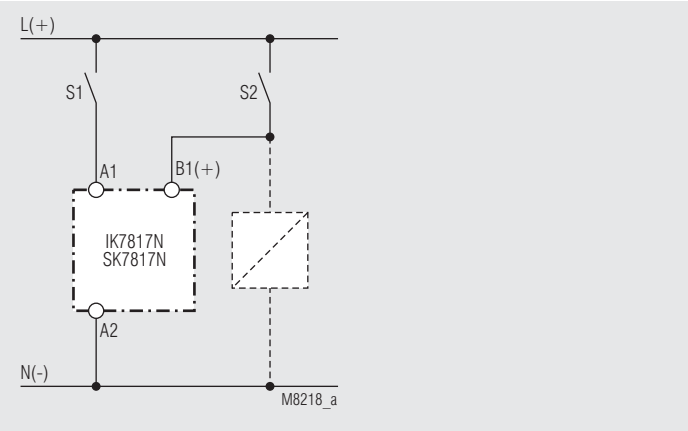


Control with parallel connected load

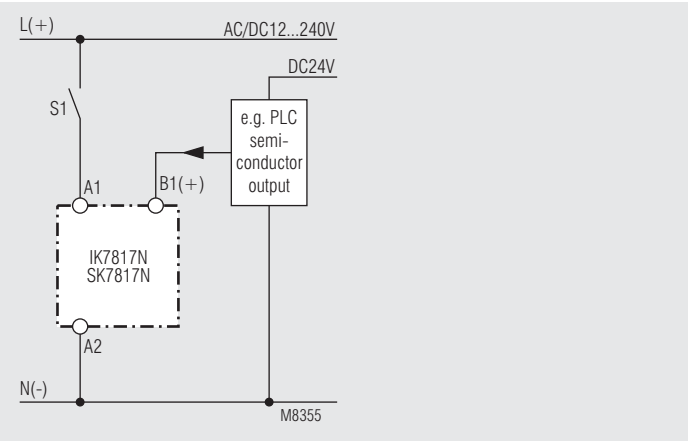


Connection with 2 different control voltages.

# MULTITIMER
# Multifunction relay
# RK 7817

0274527

## Product Description

The multifunction timers RK 7817 in compact stepped front enclosures fulfills all the demands to modern time control devices. It completes the RK- timer range that covers with only a few single function variants all common timing functions, time ranges and voltage models. The MULTI-TIMER offers 8 functions, simply selectable via rotary switch and time ranges between 0.02 s and 300h. Besides the standard 1 c/o contact also a second c/o contact or an instantaneous c/o contact is available as option. Therefore this multifunction timer is suitable to realize flexible, time depending controls in industry and building automation.

## Circuit Diagrams

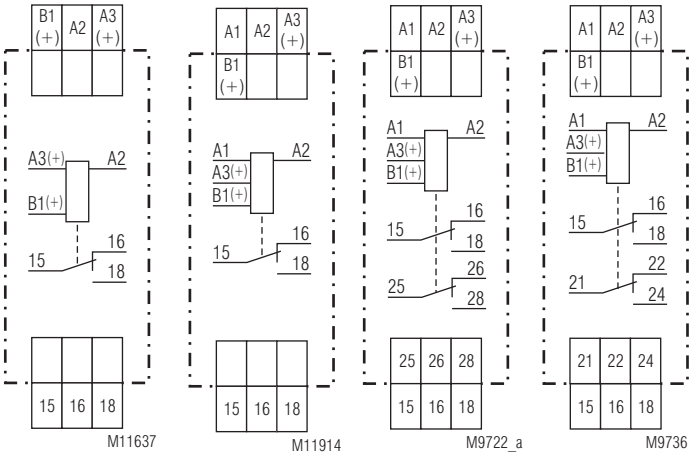


RK 7817.81 with aux. voltage AC/DC 24 V or DC 12 V | RK 7817.81 | RK 7817.82 | RK 7817.32

## Connection Terminals

| Terminal designation | Signal description |
|---|---|
| A1, A3(+), A2 | Auxiliary voltage |
| B1(+), A2 | Control input (different control functions depending on selected time function) |
| 15, 16, 18 | 1. changeover contact (delayed) |
| 25, 26, 28<br>21, 22, 24 | 2. changeover contact (delayed)<br>2. changeover contact (instantaneous contact) |

**Your Advantages**

- Timers in compact design enclosures for consumer units
  - multifunction relay RK 7817 with 8 functions and adjustment aid for quick setting of long times

**Features**

- According to IEC/EN 61 812-1
- 8 time ranges adjustable from 0.02 s to 300 h via rotational switches
- Dual-voltage-version AC 230 V + AC/DC 24 V or AC 110 ... 127 V + AC/DC 24 V
- Signle-voltage-version AC/DC 24 V or DC 12 V
- 1 changeover contact
- As option units with second changeover contact (only for voltage AC 230 V + AC/DC 24 )
  - on delayed
  - as instantaneous contact
- 8 functions via rotational switches adjustable:
  - delay on energisation (AV)
  - fleeting on make (EW)
  - delayed pulse (IE)
  - flasher, start with puls (BI)
  - delay on de-energisation (RV)
  - pulse forming function (IF)
  - fleeting on break (AW)
  - delay on energisation and de-energisation (AV / RV)
- With time interruption / time adding
- LED indicators for operation, contact position and time delay
- As option with plug in terminal blocks for exchange of devices, available
  - with screw terminals
  - with cage clamp terminals
- Width: 17.5 mm

## Approvals and Markings

CE | c UL us LISTED * Canada / USA

* see variants

## Application

Time dependent controls

## Indicators

| | |
|---|---|
| green LED: | on, when supply connected |
| yellow LED "R/t": | shows status of output relay and time delay (15-16-18): |
| -Continuous off: | output relay not active; no time delay |
| -Continuous on: | output relay active no time delay |
| -Flashing (short on, long off) | time delay: output relay not active |
| -Flashing (long on, short off) | time delay: output relay active |

## Function Diagramms

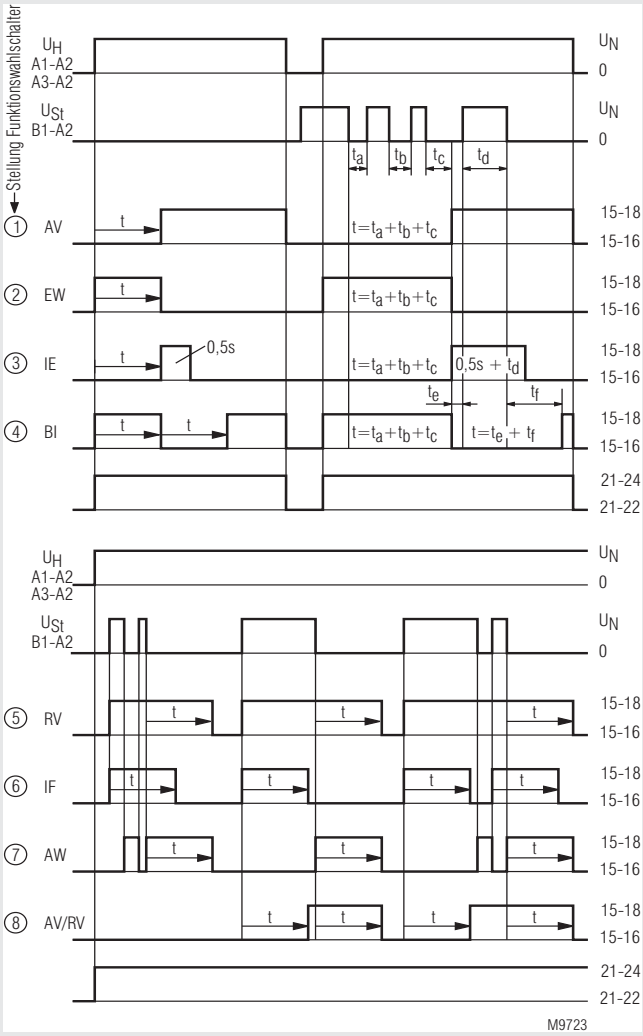


① ... ⑧ = Position of function switch

| | | | | | |
|---|---|---|---|---|---|
| ① | AV | = Delay on energisation | ⑤ | RV | = Delay on de-energisation |
| ② | EW | = Fleeting on make | ⑥ | IF | = Pulse-forming function |
| ③ | IE | = Delayed pulse | ⑦ | AW | = Fleeting on break |
| ④ | BI | = Flasher, start with pusle | ⑧ | AV/RV | = Delay on energisation and de-energisation |

## Setting RK 7817

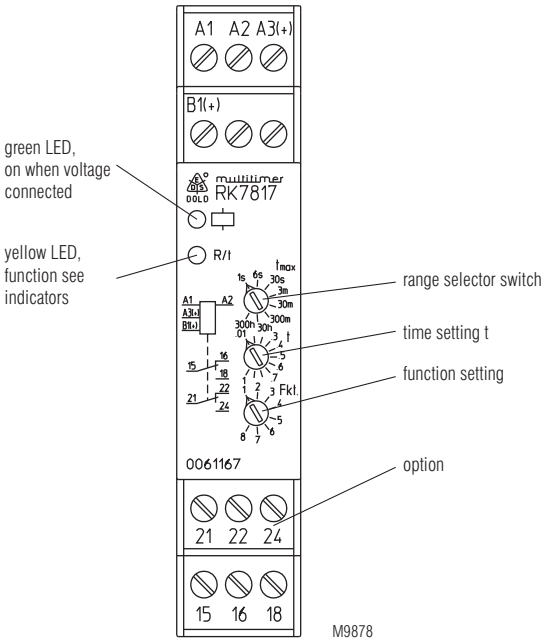


## Notes for setting of the RK 7817

**Function- and time range setting**
The function and time setting via rotary switches are enabled only when the auxiliary voltage is connected. Changing of these rotary switches while during operation does not take an effect

**Adjustment assistance**
The flashing period of the yellow LED is 1 s ± 4% and can be used to adjust the time. Especially on the lower end of scale and for long times it is suitable as the multiplication factors between the different time ranges are exact without tolerance.
Example:
The required time is 40 min. It has to be adjusted within the range 3 ... 300 min. The time check takes too long as several timing cycles would be necessary for a precise value.

For faster adjustment the setting is made to 0.03 ... 3 min. On this range the potentiometer should be set to 0.4 min (= 24 sec). With the right potentiometer setting the LED must show 24 flashing cycles. After that the time range is switched over to 3 ... 300 min and the setting is complete.

**Time interruption / Time adding**
The timing cycle can be interrupted by controlling input B1 (+) with control voltage. Removing the control signal will continue the timing cycle (time addition).

**Control input B1**
The control input B1 (+) has to be supplied with voltage against A2 with the functions RV, IF, AW, AV / RV. The control signal could be the same as the auxiliary/control voltage of A1 and A3 or any other voltage between 12 and 240 V AC or DC. Operating a parallel load between B1 and A2 is also possible.

If with function IF the inputs A1 and B1 are controlled simultaneously a pulse with the adjusted length is started.

## Technical Data

### Time circuit

| | | |
|---|---|---|
| **Time ranges:** | 8 time ranges in one unit, settable via rotational switch. | |
| | 0.02*) ... 1 s | 0.3 ... 30 min |
| | 0.06*) ... 6 s | 3 ... 300 min |
| | 0.3 ... 30 s | 0.3 ... 30 h |
| | 0.03 ... 3 min | 3 ... 300 h |
| | *) 0.08 s bei Funktion AV und IE | |
| **Time setting:** | infinite, 1:100 on relative scale | |
| **Recovery time:** | < 100 ms | |
| **Repeat accuracy:** | ≤ 0.8 % of set time delay + 20 ms | |
| **Voltage influence:** | ≤ 1 % | |
| **Temperature influence:** | ≤ 2 % at range 0 ... +60°C<br>≤ 5 % at range -20 ... 0°C | |

### Input

| | |
|---|---|
| **Nominal voltage $U_N$:** | AC/DC 24 V [1] + AC 230 V [2] or<br>AC/DC 24 V [1] + AC 110 ... 127 V [2] or<br>AC/DC 24 V [1] or<br>DC 12 V [1]<br><br>[1] at terminals A3-A2<br>[2] at terminals A1-A2 |
| **Voltage range** | |
| AC: | 0.8 ... 1.1 $U_N$ |
| DC: | 0.9 ... 1.25 $U_N$ |
| **Release voltage A1 - A2:** | AC 50 Hz approx. 30 V |
| **Release voltage A3 - A2:** | DC approx. 4 V |
| **Control current B1:** | Input resistance approx. 150 kΩ in series with diode |
| **Min. operate / off time of the control contact B1(+)** | |
| AC 50 Hz: | approx. 25 ms / approx. 60 ms |
| DC: | approx. 15 ms / approx. 60 ms |
| **Release voltage (B1-A2)** | |
| AC 50 Hz: | approx. 5 V |
| DC: | approx. 4 V |
| **Nom. consumption AC 24 V:** | approx. 1 VA |
| **Nom. consumption AC 230 V:** | approx. 7.5 VA |
| **Nom. consumption DC 24 V:** | approx. 0.5 W |
| **Nominal frequency:** | 50 Hz / 60 Hz |
| **Frequency range:** | ± 5 % |

### Output

| | | |
|---|---|---|
| **Contacts** | | |
| RK 7817.81: | 1 changeover contact delayed (15-16-18) | |
| RK 7817.82: | 2 changeover contact delayed (15-16-18), (25-26-28) | |
| RK 7817.32: | 1 changeover contact delayed (15-16-18)<br>1 changeover contact as instantaneous contact (21-22-24) | |
| **Thermal current $I_{th}$:** | 4 A | |
| **Switching capacity** according to AC 15 | | |
| NO contact: | 2 A / AC 230 V | IEC/EN 60 947-5-1 |
| NC contact: | 1 A / AC 230 V | IEC/EN 60 947-5-1 |
| **Electrical life:** | > 1 x $10^5$ switch. cycl. | IEC/EN 60 947-5-1 |
| **Mechanical life:** | > 1 x $10^7$ switching cycles | |
| **Permissible switching frequency** (without / at load): | 7200 / 360 switching cycles / h | |

## Technical Data

### General Data

| | | |
|---|---|---|
| **Nominal operating mode:** | continuous operation | |
| **Temperature range:** | - 20 ... + 60°C | |
| **Clearance and creepage distance** rated impulse voltage / pollution degree: | 4 kV / 2 | IEC 60 664-1 |
| **EMC** | | |
| Electrostatic discharge (ESD): | 8 kV (air) | IEC/EN 61 000-4-2 |
| HF irradiation: | 10 V/m | IEC/EN 61 000-4-3 |
| Fast transients: | 4 kV | IEC/EN 61 000-4-4 |
| Surge voltage between | | |
| wires for power supply: | 2 kV | IEC/EN 61 000-4-5 |
| between wire and ground: | 4 kV | IEC/EN 61 000-4-5 |
| HF-wire guided: | 10 V | IEC/EN 61 000-4-6 |
| Interference suppression: | Limit value class B | EN 55 011 |
| **Degree of protection** | | |
| Housing: | IP 40 | IEC/EN 60 529 |
| Terminals: | IP 20 | IEC/EN 60 529 |
| **Enclosure:** | thermoplastic with VO behaviour according to UL Subject 94 | |
| **Vibration resistance:** | Amplitude 0.35 mm<br>Frequency 10 ... 55 Hz, | IEC/EN 60 068-2-6 |
| **Climate resistance:** | 20 / 060 / 04 | IEC/EN 60 068-1 |
| **Terminal designation:** | EN 50 005 | |
| **Wire connection:** | | DIN 46 228-1/-2/-3/-4 |
| **Fixed screw terminals** | | |
| Cross section: | 0.34 ... 2.5 mm² (AWG 22 - 14) solid or<br>0.34 ... 2.5 mm² (AWG 22 - 14) stranded wire with and without ferrules | |
| Stripping length: | 7 mm | |
| **Wire fixing:** | Captive slotted screw / M2.5 | |
| **Plug-in screw terminals** | | |
| Cross section: | 0.2 ... 2.5 mm² (AWG 24 - 12) solid or<br>0.2 ... 2.5 mm² (AWG 24 - 12) stranded wire with and without ferrules | |
| Stripping length: | 7 mm | |
| **Wire fixing:** | Captive slotted screw / M2.5 | |
| **Plug-in cage clamp terminals** | | |
| Cross section: | 0.2 ... 2.5 mm² (AWG 24 - 12) solid or<br>0.25 ... 2.5 mm² (AWG 24 - 12) stranded wire with and without ferrules | |
| Stripping length: | 10 mm | |
| **Wire fixing:** | Cage clamp terminal | |
| **Fixing torque:** | 0.5 Nm | EN 60 999-1 |
| **Mounting:** | DIN-rail | IEC/EN 60 715 |
| **Weight**: | 70 g | |

### Dimensions

| | |
|---|---|
| **Width x height x depth**: | |
| RK 7817: | 17.5 x 90 x 66 mm |
| RK 7817 PC: | 17.5 x 121 x 66 mm |
| RK 7817 PS: | 17.5 x 107 x 66 mm |

## UL-Data

**Switching capacity:**
Ambient temperature 60°C: Pilot duty B300
4A 240Vac G.P.
4A 30Vdc G.P.

**Wire connection:** 60°C / 75°C copper conductors only
AWG 22 - 14 Sol/Str Torque 0.5 Nm

**Technical data that is not stated in the UL-Data, can be found in the technical data section.**

## Standard Type

RK 7817.81/61 AC 230 V + AC/DC 24 V 0.02 s ... 300 h
Article number: 0061137

- Multifunction relay
- Output: 1 changeover contact
- Nominal voltage $U_N$: AC 230 V + AC/DC 24 V
- Width: 17.5 mm

## Variant

RK 7817.81/61: with UL-approval

**Ordering example for variant**

RK 7817 .81 _ _ /61 AC 230 V + AC/DC 24 V 50 Hz 0,02 s - 300 h

- Time range
- Nominal frequency
- Nominal voltage
- with UL-approval (1 changeover contact)
- Type of terminals
  - without indication: terminal blocks fixed, with screw terminals
  - PC (plug in cage clamp): pluggable terminal blocks with cage clamp terminals
  - PS (plug in screw): pluggable terminal blocks with screw terminals
- Contact
- Type

## Options with Pluggable Terminal Blocks

Screw terminal
(PS/plugin screw)

Cage clamp terminal
(PC/plugin cage clamp)

## Connection Example

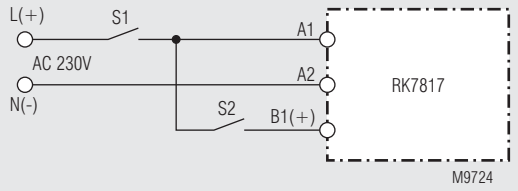


Control with AC 230 V

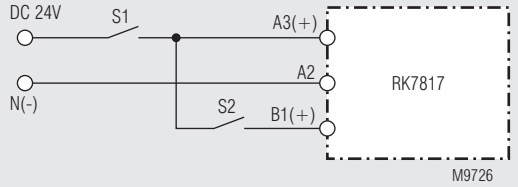


Control with DC 24 V

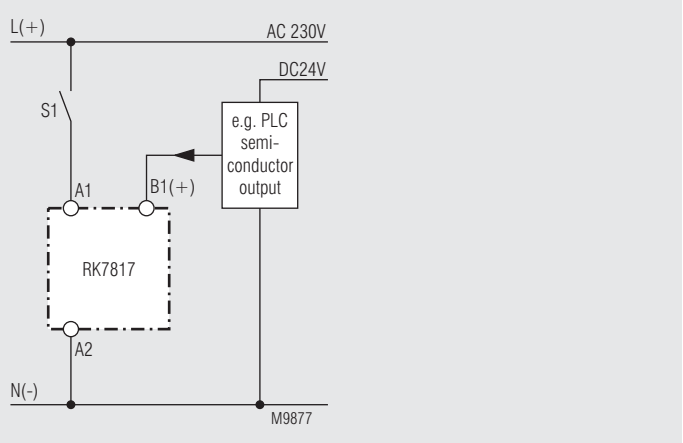


Controlled via A1 and B1 with different voltages.

# MULTITIMER
## Multifunction Relay
## BC 7935N

0225499

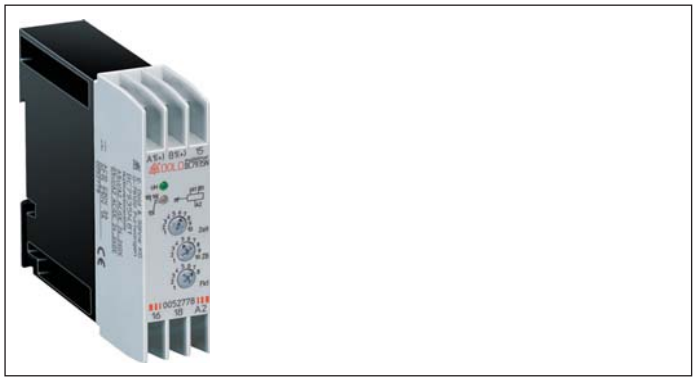

- According to IEC/EN 61 812-1
- 8 functions selectable by rotational switch:
  AV - operate delay
  EW - fleeting on make
  IE - delayed pulse function
  BE - flasher start with impulse
  RV - release delay
  IF - pulse forming
  AW - fleeting on break
  AV/RV - operate / release delay
- With 10 time ranges up to 300 h selectable by rotational switch
- Time addition via control input B1 for the functions AV, EW, IE, BE
- Time ranges up to 300 h
- AC/DC 24 ... 240 V
- 1 changeover contact
- LED indicators for voltage supply and contact position, flashing function during elapse of time
- Wire connection: also 2 x 1.5 mm² stranded ferruled (isolated), DIN 46 228-1/-2/-3/-4 or 2 x 2.5 mm² stranded ferruled DIN 46 228-1/-2/-3
- Width 22.5 mm

### Circuit Diagram

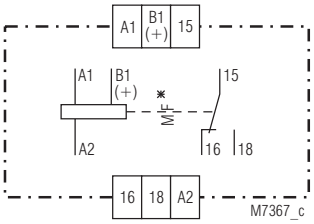


### Approvals and Markings

CE

### Applications

Time-dependent controllers

### Indicators

| | |
|---|---|
| green LED: | on, when supply connected. |
| yellow LED: | on, when output relay active. Flashes during time delay, pulse-pause-ratio indicates the state of the output relay (see Function Diagramm). |

### Notes

The functions RV, IF, AW, AV/RV have to be controlled by input B1(+) according to the connection Diagram.
At the functions AV,EW,IE, BE the timing cycle can be stopped by closing S2 (see Diagram). When opening S2 the timing cycles continues.

### Technical Data

## Function Diagram

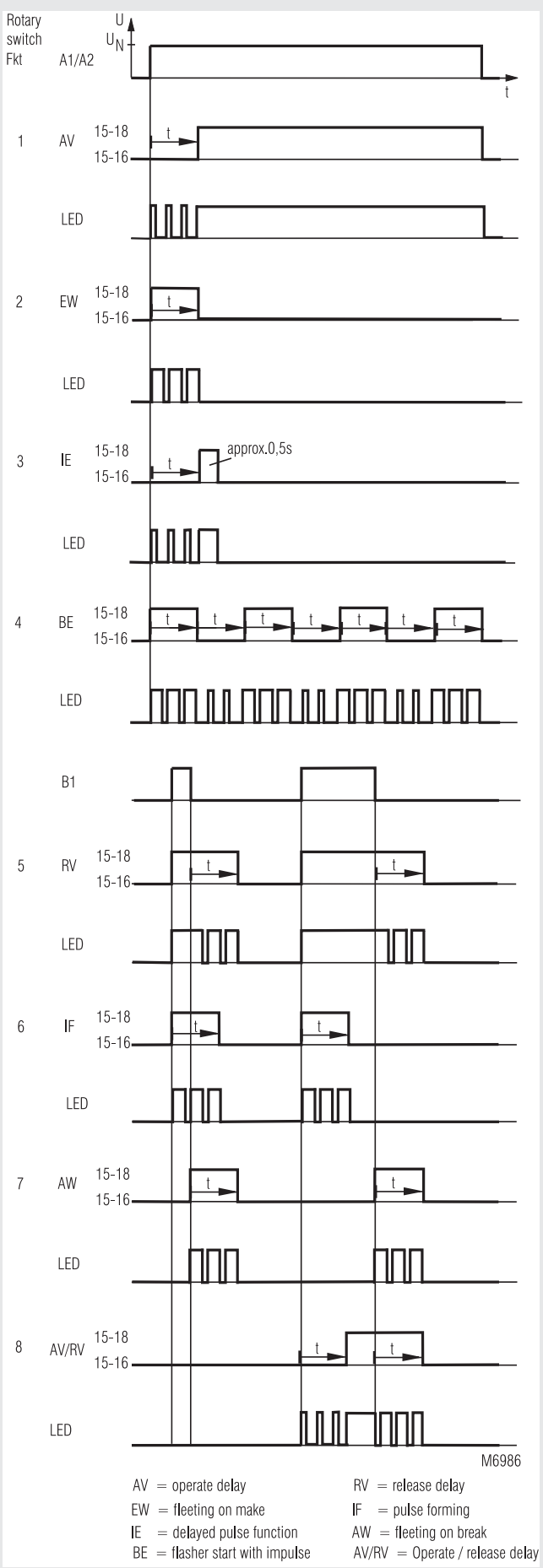


## Technical Data

### Time Circuit

| | | |
|---|---|---|
| **Time ranges:** | 0.05 ... 1 s | 1.5 ... 30 min |
| | 0.15 ... 3 s | 15 ... 300 min |
| | 0.5 ... 10 s | 1.5 ... 30 h |
| | 1.5 ... 30 s | 15 ... 300 h |
| | 5 ... 100 s | |
| | 15 ... 300 s | |
| | selectable by switch (ZB) | |
| **Time setting:** | infinitely variable 1:20 | |
| **Recovery time:** | 50 ms | |
| **Repeat accuracy:** | 2 % | |
| **Voltage influence:** | ≤ 1 % | |
| **Temperature influence:** | 0.05 % / K | |

### Input

**Nominal voltage $U_N$**
A1 / A2, B1(+) / A2: AC/DC 24 ... 240 V, DC 12 V
**Voltage range:** 0.8 ... 1.1 $U_N$
**Nominal consumption:**

| AC | | DC | |
|---|---|---|---|
| 24 V | 240 V | 24 V | 240 V |
| 1.1 VA | 4.1 VA | 0.93 W | 1.95 W |

**Nominal frequency:** 50 / 60 Hz
**Release voltage:** AC: ≥ 15 % $U_N$, DC: ≥ 5 % $U_N$
**Min. ontime of control input B1:** AC 30 ms, DC 10 ms

### Output

| | | |
|---|---|---|
| **Contacts:** | 1 changeover contact | |
| **Thermal current $I_{th}$:** | 4 A | |
| **Switching capacity** | | |
| to AC 15: | 3 A / AC 230 V | IEC/EN 60 947-5-1 |
| **Electrical life** | | IEC/EN 60 947-5-1 |
| to AC 15 at 1 A, AC 230 V: | typ. 150 000 switching cycles | |
| **Short circuit strength** | | |
| **max. fuse rating:** | 4 A gL | IEC/EN 60 947-5-1 |
| **Mechanical life:** | $10^8$ switching cycles | |

### General Data

| | | |
|---|---|---|
| **Operating mode:** | Continuous operation | |
| **Temperature range:** | 0 ... + 60°C | |
| **Clearance and creepage distances** | | |
| rated impulse voltage / pollution degree: | 4 kV / 2 | IEC 60 664-1 |
| **EMC** | | |
| Electrostatic discharge: | 8 kV (air) | IEC/EN 61 000-4-2 |
| HF irradiation: | 10 V/m | IEC/EN 61 000-4-3 |
| Fast transients: | 2 kV | IEC/EN 61 000-4-4 |
| Surge voltages between | | |
| wires for power supply: | 1 kV | IEC/EN 61 000-4-5 |
| between wire and ground: | 2 kV | IEC/EN 61 000-4-5 |
| Interference suppression: | Limit value class B | EN 55 011 |
| **Degree of protection** | | |
| Housing: | IP 40 | IEC/EN 60 529 |
| Terminals: | IP 20 | IEC/EN 60 529 |
| **Housing:** | Thermoplastic with V0 behaviour to UL subject 94 | |
| **Vibration resistance:** | Amplitude 0.35 mm frequency 10 ... 55 Hz | IEC/EN 60 068-2-6 |
| **Climate resistance:** | 0 / 060 / 04 | IEC/EN 60 068-1 |
| **Terminal arrangement:** | DIN 46 199-5 | |
| **Terminal designation:** | EN 50 005 | |

## Technical Data

| | |
|---|---|
| **Wire connection:** | 1 x 4 mm² solid or<br>1 x 2.5 mm² stranded ferruled (isolated)<br>or<br>2 x 1.5 mm² stranded ferruled (isolated)<br>DIN 46 228-1/-2/-3/-4 or<br>2 x 2.5 mm² stranded ferruled<br>DIN 46 228-1/-2/-3 |
| **Wire fixing:** | Terminal screws M 3.5<br>Box terminal with wire protection |
| **Mounting:** | DIN rail IEC/EN 60 715 |
| **Weight:** | 105 g |

### Dimensions

| | |
|---|---|
| **Width x height x depth:** | 22.5 x 84 x 97 mm |

## Standard Type

BC 7935N.81 AC/DC 24 ... 240 V 50/60 Hz
Article number: 0052778

- Front colour grey, with box terminals
- Output: 1 changeover contact
- Nominal voltage $U_N$: AC/DC 24 ... 240 V
- Width: 22.5 m

## Ordering Example

BC 7935N .81 AC/DC 24 ... 240 V 50 / 60 Hz

- 50 / 60 Hz: Nominal frequency
- AC/DC 24 ... 240 V: Nominal voltage
- .81: Contacts
- BC 7935N: Type

## Connection Examples

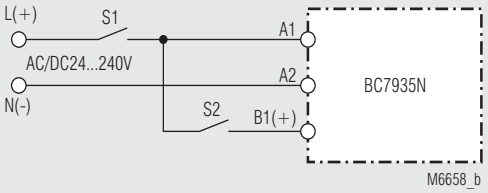


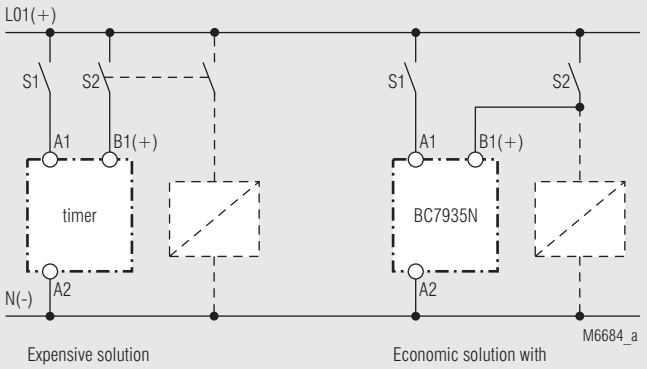


Expensive solution to operate an additional parallel load

Economic solution with DOLD BC7935N

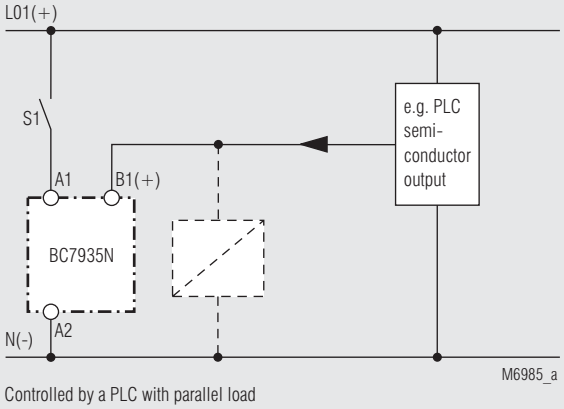


Controlled by a PLC with parallel load

# MULTITIMER
## Multifunction Relay, digital
## MK 7830N

DOLD

0265927

### Function Diagram

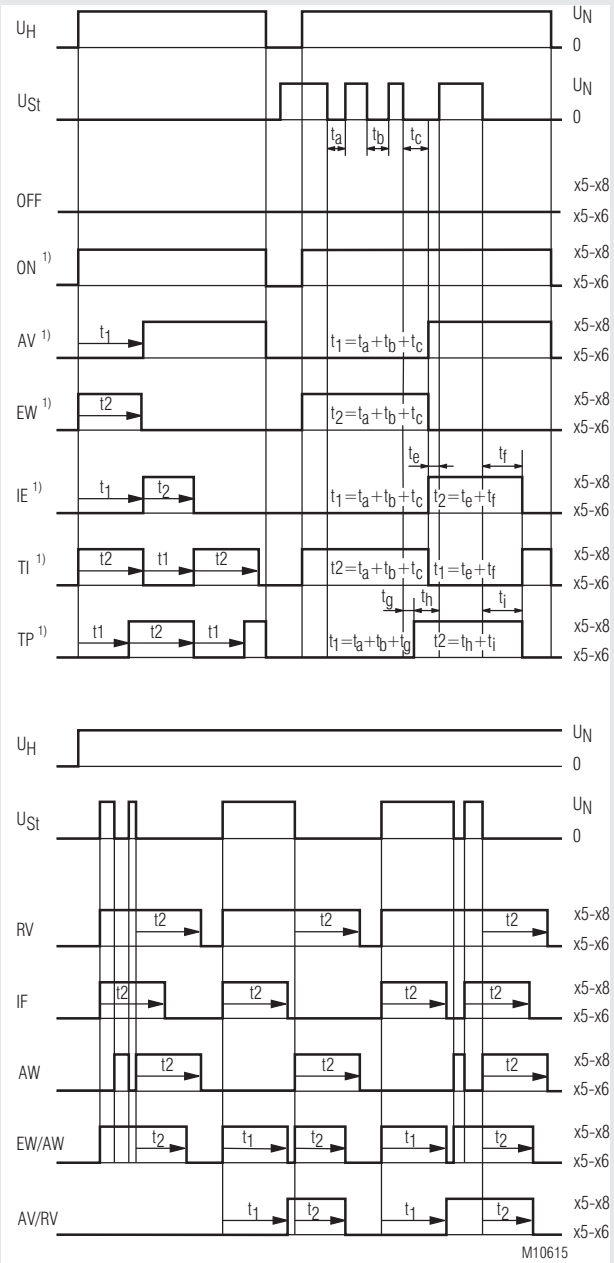


$U_H$ = Operating voltage A1-A2 or A3-A2
$U_{ST}$ = Control voltage Bx-A2 x = 1, 2

1) These functions can also be started by the control input B1 if configured accordingly.
The interruption of time then is not available.

**Your advantages**
- Always the correct timer on stock
- Space saving in industrial cabinets because 2 multifunction relays in one compact enclosure
- Precise time delay by digital setting

**Features**
- According to IEC/EN 61 812-1
- Digital adjustable multifunction timer
- Functions can be adjusted separately for each output relay
  - Off (OFF)
  - Instantaneous contact (ON)
  - On-delay (AV)
  - Fleeting on make (EW)
  - Delayed pulse with adjustable pulse length (IE)
  - Cyclic timer, start with impulse (TI)
  - Cyclic timer, start with break (TP)
  - Off-delay (RV)
  - Pulse forming function (IF)
  - Fleeting on break (AW)
  - Fleeting on make and break (EW / AW)
  - On and off delay (AV / RV)
  - Relay 1 = Relay 2, both switch simultaneously
- Dual voltage model AC 230 V + AC/DC 24 V
- 2 changeover contacts
- 2 times separately adjustable from 0.02s to 9999h
- LED-indicator
- As option with pluggable terminal blocks for easy exchange of devices
  - with screw terminals
  - or with cage clamp terminals
- Width: 22.5 mm

### Approvals and Markings

CE

### Applications

The MK 7830N is the ideal timer for timing control functions in industry. The simple and userfriendly configuration allows an optimised adaption to the application. The multifunction timer is also suitable for service and maintenance as it can replace timers with different functions and time ranges.

### Indicators

The LED indicates the device status

| | |
|---|---|
| OFF: | No operation voltage (A1/A2 bzw. A3/A2). |
| green: | The device is in operating mode |
| orange flashing: | The device is in set up mode |
| red: | Failure |

For the chosen output relay the setting parameters are cyclically displayed

| | |
|---|---|
| Display mode 1: | For the chosen output relay the setting parameters are cyclically displayed. |
| Display mode 2: | For the chosen output relay the time delay is displayed. The remaining time until the contact switches is indicated. This mode is only available when at least one time value t1 or t2 of the timing function is set to > 1 sec. |

By pressing the button „ ⬆ “ the display can be toggled between relay 1 and relay 2. 2 display modes are available, the change between the modes is made by pressing the button „ ⬇ “.

## Circuit Diagrams

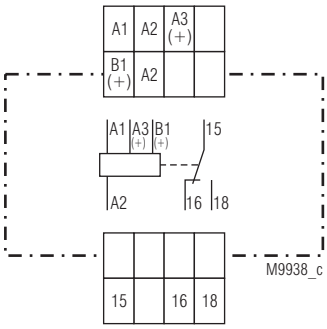


MK 7830N.81

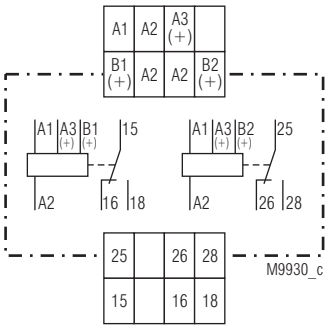


MK 7830N.82

## Connection Terminals

| Terminal designation | Signal description |
|---|---|
| A1 | Supply voltage (L; AC 230 V) |
| A3(+) | Supply voltage (L / +; AC/DC 24 V) |
| A2 | Supply voltage (N / -) |
| B1(+) | Control input (different function depending on chosen timing function). Control with reference to A2 |
| B2(+) *) | Control input (different function depending on chosen timing function). Control with reference to A2 |
| 15, 16, 18 | Changeover contact |
| 25, 26, 28 *) | Changeover contact |

*) only at MK7830N.82

## Error Indication

In case of a failure the status LED is red and the text in the display shows the failure description

„Err.1“: Parameter checksum failure for output relay 1. The failure can be resolved by new configuration of output relay 1.

„Err.2“: Parameter checksum failure for output relay 2. The failure can be resolved by new configuration of output relay 2.

## Notes

**Factory setting**
The output relays Rel.1 and Rel.2 are set to function OFF. The contacts 15-16 and 25-26 are closed. The function setup is described in section “Programming”.

**Control inputs B1 and B2**
The control inputs are assigned to the corresponding output relays. The input B1(+) acts on Rel.1, the input B2(+) on Rel.2. The functions RV, IF, AW,EW/AW and AV/RV have always to be controlled with one of the control inputs with reference to A2. For the functions ON, AV, EW, IE, TI and TP the control can be selected between B1, B2 and operating voltage during setup.
To control B1(+) and B2(+) the voltage of A1, A3, or any other voltage in the range of AC/DC24-240 can be used.
When with selected function IF the control inputs B1 or B2 are connected to the unit simultaneously with A1 or A3 an output pulse of the length t2 is generated.

**Interruption of time delay / time addition with B1 or B2**
If for the functions AV, EW, IE, TI and TP the control is assigned to the operating voltage the time delay can be stopped by activating the corresponding control input. It continues the time delay by de-activating the control input (time addition).

## Setting

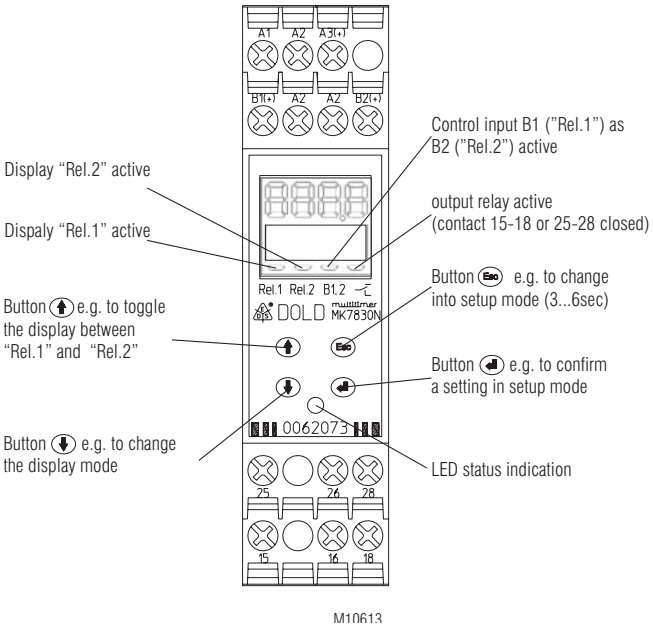


## Technical Data

**Time circuit**

| | |
|---|---|
| **Time ranges:** | 7 time ranges in one unit |
| | 20*) ... 9999 ms (Δt = 1 ms) |
| | 0.1 ... 999.9 s (Δt = 0.1 s) |
| | 1 ... 9999 s (Δt = 1 s) |
| | 0.1 ... 999.9 min (Δt = 0.1 min) |
| | 1 ... 9999 min (Δt = 1 min) |
| | 0.1 ... 999.9 h (Δt = 0.1 h) |
| | 1 ... 9999 h (Δt = 1 h) |
| | *) 80 ms at function RV |
| **Time setting t1, t2:** | digital (see Setting) |
| **Recovery time:** | < 100 ms |
| **Repeat accuracy** | |
| Start with operation voltage: | ± (0.03 % of set value + 50 ms) |
| Start control input: | ± (0.03 % of set value + 20 ms) |
| **Saving the parameters:** | ≥ 1 x $10^5$ Writing cycles |

**Input**

| | |
|---|---|
| **Nominal voltage $U_N$:** | AC/DC 24 V[1] or AC 230 V[2] |
| | [1] at terminals A3-A2 |
| | [2] at terminals A1-A2 |
| **Voltage range:** | |
| AC: | 0.8 ... 1,1 $U_N$ |
| DC: | 0.9 ... 1.25 $U_N$ |
| **Release voltage (A1-A2):** | |
| AC 50 Hz: | 75 V |
| **Release voltage (A3-A2):** | |
| DC: | 7 V |
| **Control voltage (B1-A2 ; B2-A2):** | AC/DC 12 ... 240 V |
| **Control current B1; B2:** | input resistance approx. 150 kΩ in series with diode |
| **Min. on/off time of control input B1(+); B2 (+):** | |
| AC 50 Hz: | 25 ms / 80 ms |
| DC: | 10 ms / 80 ms |
| **Release voltage (B1-A2; B2-A2):** | |
| AC 50 Hz: | 4.5 V |
| DC: | 4 V |
| **Nominal power consumption:** | |
| AC 24 V: | 1.4 VA |
| AC 230 V: | 9 VA |
| DC 24 V: | 0.9 W |
| **Nominal frequency:** | 50 Hz |
| **Frequency range:** | ± 5 % |

## Technical Data

**Output**

| | | |
|---|---|---|
| **Contacts:** | | |
| MK 7830N.81: | 1 changeover contact | |
| MK 7830N.82: | 2 changeover contacts<br>Rel.1: contact 15-16-18<br>Rel.2: contact 25-26-28 | |
| **Contact material:** | AgNi | |
| **Measured nominal voltage:** | AC 250 V | |
| **Thermal current $I_{th}$:** | 2 x 4 A | |
| **Switching capacity** | | |
| to AC 15 | | |
| NO contact: | 3 A / AC 230 V | IEC/EN 60 947-5-1 |
| NC contact: | 1 A / AC 230 V | IEC/EN 60 947-5-1 |
| to DC 13: | 1 A / DC 24 V | IEC/EN 60 947-5-1 |
| **Electrical life** | | IEC/EN 60 947-5-1 |
| to AC 15 at 1 A, AC 230 V: | 1.5 x $10^5$ switching cycles | |
| **Permissible switching frequency:** | 36 000 switching cycles / h | |
| **Short circuit strength** | | |
| **max. fuse rating:** | 4 A gL | IEC/EN 60 947-5-1 |
| **Mechanical life:** | ≥ 1 x $10^8$ switching cycles | |

**General Data**

| | | |
|---|---|---|
| **Operating mode:** | Continuous operation | |
| **Temperature range** | | |
| Operation: | 0 ... + 55 °C | |
| Storage: | -20 ... + 70 °C | |
| **Relative air humidity:** | 93 % at 40 °C | |
| **Altitude:** | < 2,000 m | |
| **Clearance and creepage distances** | | |
| rated impulse voltage / | | |
| Input / Output: | 4 kV / 3 (basis insulation) | IEC 60 664-1 |
| Output / Output: | 4 kV / 3 (basis insulation) | IEC 60 664-1 |
| Overvoltage category: | III | |
| Insulation test voltage, type test: | 2.5 kV; 1 min | |
| **EMC** | | |
| Electrostatic discharge: | 8 kV (air) | IEC/EN 61 000-4-2 |
| HF-irradiation | | |
| 80 MHz ... 1 GHz: | 12 V / m | IEC/EN 61 000-4-3 |
| 1 GHz ... 2,7 GHz: | 10 V / m | IEC/EN 61 000-4-3 |
| Fast transients: | 2 kV | IEC/EN 61 000-4-4 |
| Surge voltages between | | |
| wires for power supply A3, A2: | 1 kV | IEC/EN 61 000-4-5 |
| wires for power supply A1, A2: | 2 kV | IEC/EN 61 000-4-5 |
| between wire and ground: | 4 kV | IEC/EN 61 000-4-5 |
| HF-wire guided: | 10 V | IEC/EN 61 000-4-6 |
| Interference suppression: | Limit value class B | EN 55 011 |
| **Degree of protection** | | |
| Housing: | IP 40 | IEC/EN 60 529 |
| Terminals: | IP 20 | IEC/EN 60 529 |
| **Housing:** | Thermoplastic with V0 behaviour according to UL subject 94 | |
| **Vibration resistance:** | Amplitude 0.35 mm, frequency 10 ... 55 Hz, | IEC/EN 60 068-2-6 |
| **Climate resistance:** | 10 / 055 / 04 | IEC/EN 60 068-1 |
| **Terminal designation:** | EN 50 005 | |
| **Wire connection** | | DIN 46 228-1/-2/-3/-4 |
| **Screw terminals (integrated)**: | 1 x 4 mm² solid or<br>1 x 2.5 mm² stranded ferruled (isolated)<br>or<br>2 x 1.5 mm² stranded ferruled (isolated)<br>or<br>2 x 2.5 mm² solid | |
| Insulation of wires or sleeve length: | 8 mm | |
| **Plug in with screw terminals** | | |
| max. cross section for connection: | 1 x 2.5 mm² solid or<br>1 x 2.5 mm² stranded ferruled (isolated) | |
| Insulation of wires or sleeve length: | 8 mm | |

## Technical Data

| | | |
|---|---|---|
| **Plug in with cage clamp terminals** | | |
| max. cross section for connection: | 1 x 4 mm² solid or<br>1 x 2.5 mm² stranded ferruled | |
| min. cross section for connection: | 0.5 mm² | |
| Insulation of wires or sleeve length: | 12 ±0.5 mm | |
| **Wire fixing:** | Plus-minus terminal screws M 3.5 box terminals with wire protection or cage clamp terminals | |
| **Wire fixing:** | Box terminals with wire protection | |
| **Fixing torque:** | 0.8 Nm | |
| **Mounting:** | DIN rail | IEC/EN 60 715 |
| **Weight:** | approx. 130 g | |

**Dimensions**

| | |
|---|---|
| **Width x heigth x depth** | |
| MK 7830N: | 22.5 x 90 x 99 mm |
| MK 7830N PC: | 22.5 x 111 x 99 mm |
| MK 7830N PS: | 22.5 x 104 x 99 mm |

## Standard Type

MK 7830N.82 AC/DC 24 V + AC 230 V 50 Hz

| | |
|---|---|
| Article number: | 0062073 |
| • Ausgang: | 2 changeover contacts |
| • Nominal voltage $U_N$: | AC/DC 24 V + AC 230 V |
| • Time ranges: | from 0.02 s ... 9999 h |
| • Width: | 22.5 mm |

## Ordering Example

MK 7830N .82 _ _ AC/DC 24 V + AC 230 V

- AC/DC 24 V + AC 230 V: Nominal voltage
- _ _: Type of terminals
  - without indication: terminal blocks fixed with screw terminals
  - PC (plug in cage clamp): pluggable terminal blocks with cage clamp terminals
  - PS (plug in screw): pluggable terminal blocks with screw terminals
- .82: Contacts
- MK 7830N: Type

## Options with Pluggable Terminal Blocks

Screw terminal (PS/plugin screw)

Cage clamp (PC/plugin cage clamp)

## Notes

Removing the terminal blocks with cage clamp terminals

1. The unit has to be disconnected.
2. Insert a screwdriver in the side recess of the front plate.
3. Turn the screwdriver to the right and left.
4. Please note that the terminal blocks have to be mounted on the belonging plug in terminations.

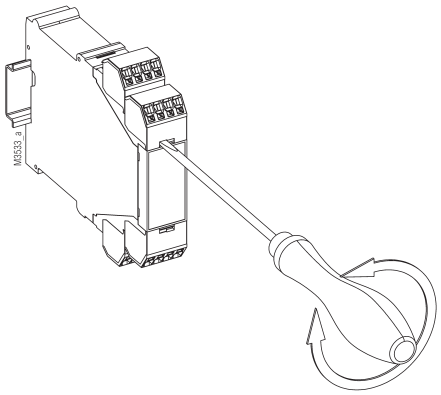


## Programming

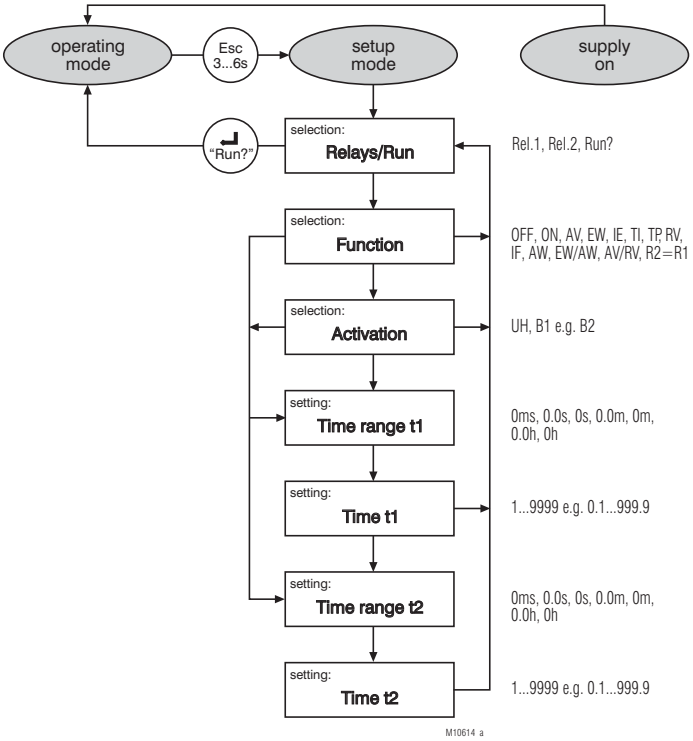


If the button „ Esc " is pressed and released after 3 to 6 sec while the power is applied, the unit changes into setup mode. The status LED indicates this flashing yellow. When changing to setup mode the time delay is interrupted and the output relays de-energize to position 15-16 and 25-26.
. In setup mode the first step "Relais/Run" selects the output relay Rel.1 or Rel.2 to be configured. Using the buttons „ ↑ " and „ ↓ " scrolls through the possible selections in this level. The button „ ↵ " confirms the selection and moves to the next level. After completing the programming cycle the level "Relais/Run" is again displayed while the parameters are finally stored in the unit.
The new settings are activated when changing to operating mode either by selecting Run? In level "Relais/Run" or by switching the unit off and on.

## Connection Examples

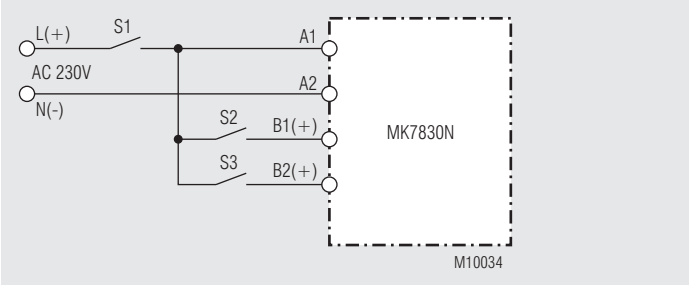


Control with AC 230 V

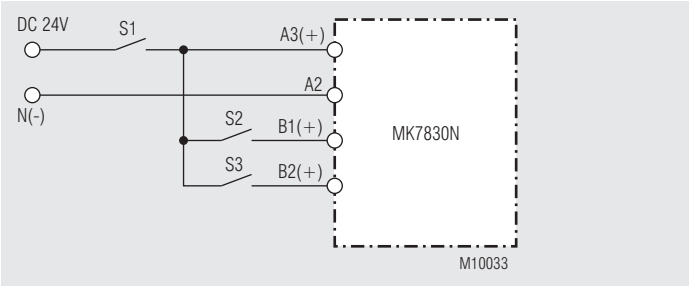


Control with DC 24 V

# MULTITIMER
## Multifunction Relay
## MK 7850N/200

0239280

### Circuit Diagrams

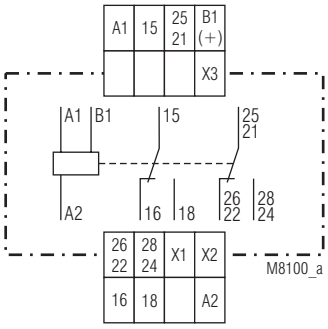


MK 7850N.82/200

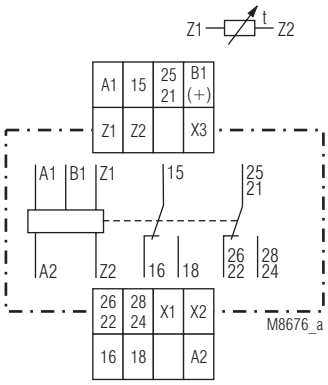


MK 7850N.82/300

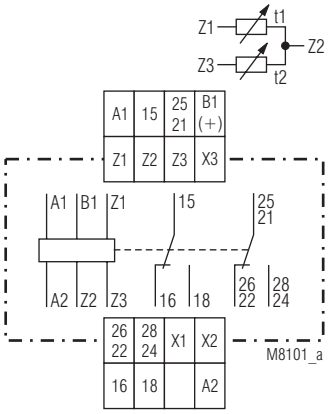


MK 7850N.82/500

### Your Advantages
- Up to 10 functions in one unit
- Simplified storage
- Increased flexibility
- Quick setting of long time values

### Features
- According to IEC/EN 61 812-1
- 8 functions settable via rotational switch:
  - Delay on energisation (AV)
  - Fleeting on make (EW)
  - Delayed pulse (IE)
  - Flasher, start with pulse (BI)
  - Delay on de-energisation (RV)
  - Pulse forming function (IF)
  - Fleeting on break (AW)
  - Delay on energisation and de-energisation (AV / RV)
- 8 time ranges from 0.02 s to 300 h selectable via rotational switches
- Voltage range AC/DC 12 ... 240 V
- With time interruption / time adding input for all functions
- Suitable for 2-wire proximity sensor control
- 2 changeover contacts, one programmable as instantaneous contact
- LED indicators for operation, contact position and time delay
- Wire connection: also 2 x 1.5 mm² stranded ferruled, or 2 x 2.5 mm² solid DIN 46 228-1/-2/-3/-4
- as option with pluggable terminal blocks for easy exchange of devices
  - with screw terminals
  - or with cage clamp terminals
- 22.5 mm width

MK 7850N/500: as MK 7850N/200 but with
- 2 additional functions:
  - Cyclic timer, start with break (TP)
  - Fleeting on make and break (EW / AW)
- second time setting $t_2$ for functions
  - Cyclic timer, start with pulse (TI) or break (TP), based on the separate setting of pulse and break time the flasher function can be used as cyclic timer
  - Fleeting on make and break (EW/AW)
  - Delay on energisation and de-energisation (AV / RV)
  - Delay pulse (IE) and setting of pulse length
- Connection facility for 2 external potentiometers

### Approvals and Markings

CE | c UL us LISTED * Canada / USA | CCC A025518

* see variants

### Application

Time dependent controls for industrial and railway applications.

### Indicators

| | |
|---|---|
| green LED: | on when voltage connected |
| yellow LED "R/t": | shows status of output relay and time delay: |
| -Continuously off: | output relay not active; no time delay |
| -Continuously on: | output relay active; no time delay |
| -Flashing (short on, long off) | output relay not active; time delay |
| -Flashing (long on, short off) | output relay active; time delay |

## Function Diagram

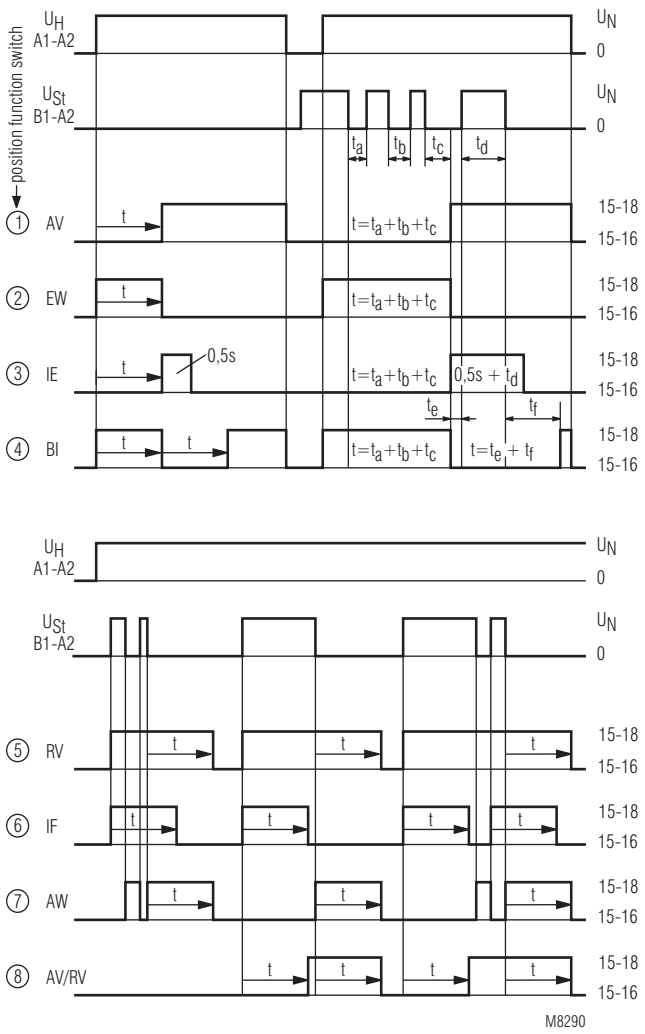


MK 7850N/200

① ... ⑧ = position of function switch

① AV = Delay on energisation
② EW = Fleeting on make
③ IE = Delayed pulse
④ BI = Flasher, start with pulse
⑤ RV = Delay on de-energisation
⑥ IF = Pulse forming function
⑦ AW = Fleeting on break
⑧ AV/RV = Delay on energisation and de-energisation

## Function Diagram

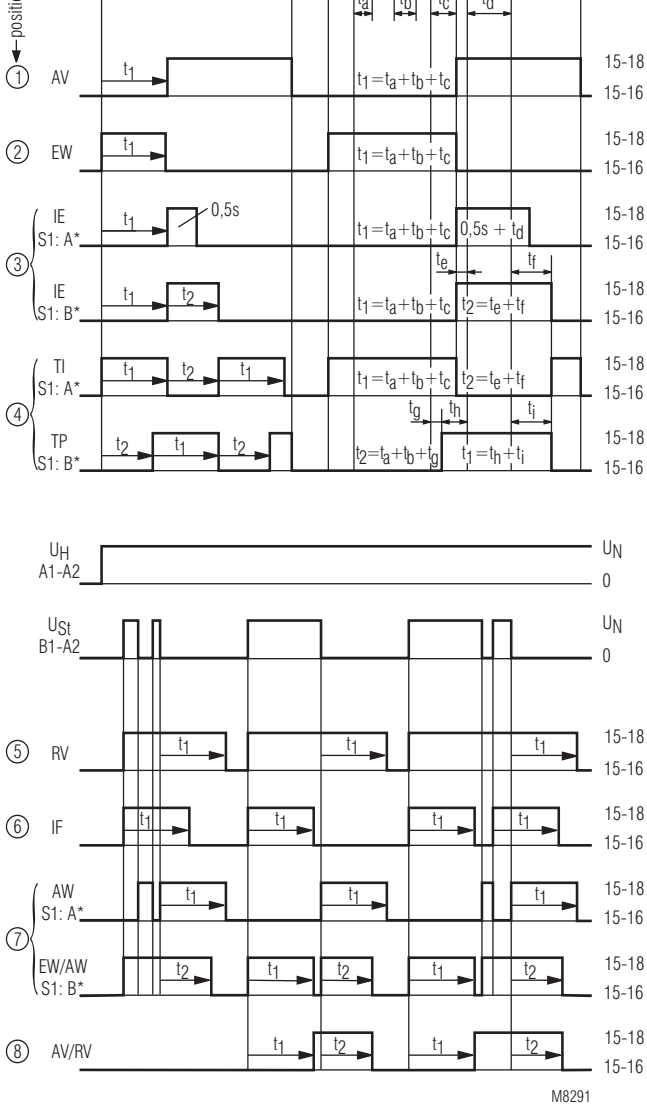


*) A and B indicate the position of function slide switch S1

MK 7850N/500

①... ⑧ = position of function switch

① AV = Delay on energisation
② EW = Fleeting on make
③ IE = Delayed pulse
S1 in positon A:
t1: adjustable, t2 = 0.5 s fixed
S1 in position B:
t1 and t2 adjustable
④ TI = Cyclic timer, start with pulse
S1 in position A
TP = Cyclic timer, start with break
S1 in position B
⑤ RV = Delay on de-energisation
⑥ IF = Pulse forming function
⑦ AW = Fleeting on break
S1 in position A
EW/AW = Fleeting on make and break
S1 in position B
⑧ AV/RV = Delay on energisation and de-energisation

## Connection Terminals

| Terminal designation | Signal description |
|---|---|
| A1, A2 | Auxiliary voltage |
| B1(+), A2 | Control input (various control possible, depending on the time function) |
| X1, X2 | Control input (2. delayed C/O contact or instantaneous contact)<br>X1/X2 not bridged:<br>2nd delayed C/O contact 25-26-28<br>X1/X2 bridged:<br>2nd instantaneous C/O contact 21-22-24 |
| X3, X2 | Control input (Time interruption/time adding)<br>X3/X2 bridged:<br>Time interruption<br>X3/X2 not bridged:<br>continued time delay (with time adding) |
| Z1, Z2 | Input for connection of a external potentiometer for time setting t1 |
| Z3, Z2 | Input for connection of a external potentiometer for time setting t2 |
| 15, 16, 18 | 1st C/O contact (delayed) |
| 21, 22, 24, 25, 26, 28 | 2nd C/O contact (delayed), if X1/X2 not bridged<br>2nd C/O contact (instantaneous), if X1/X2 bridged |

## Notes

**Control of A1-A2 with proximity sensors**
The input can be controlled by DC 3 wire or AC/DC 2 wire proximity sensors. For operating voltage > 24 V and usage of sensors without built-in short circuit protection a protection resistor on A1 is recommendend to reduce the inrush current. The dimension is as follows:

$R_v \approx$ operating voltage / max. switching current of sensor

The series resistor must not be selected higher than necessary.
Max. values are:

| | | | | |
|---|---|---|---|---|
| Operating voltage: | 48 V | 60 V | 110 V | 230 V |
| Series resistor $R_v$ max: | 270 Ω | 390 Ω | 680 Ω | 1.8 kΩ (1 W) |

**Instantaneous contact**
By external wire links the output function of the device can be altered from 2 delayed contacts to 1 delayed **and** 1 instantaneous contact. The contact 25-26-28 is delayed without bridge on X1-X2, it is instantaneous with bridge on X1-X2. The legend term is 21-22-24. The instantaneous contact switches when the operating voltage is connected. To terminals X1 and X2 no other voltage potentials must be connected, as the unit might be damaged.

**Adjustment assistance**
The flashing period of the yellow LED is 1 s ± 4 % and can be used to adjust the time. Especially on the lower end of scale and for long times it is suitable as the multiplication factors between the different time ranges are exact without tolerance.
Example:
The required time is 40 min. It has to be adjusted within range 3 ... 300 min.The time check takes too long as several timing cycles would be necessary for a precise value. For faster adjustment the setting is made to 0.03 ... 3 min. On this range the potentiometer should be set to 0.4 min (= 24 sec.). With the right potentiometer setting the LED must show 24 flashing cycles. After that the time range is switched over to 3 ... 300 min. and the setting is complete.

**Time interruption / time adding with B1**
With the functions AV, EW, IE and BI the time delay can be interrupted by controlling input B1 (+) with control voltage. Removing the control signal will continue the timing cycle (time addition).

## Notes

**Control input B1**
The functions RV, IF, AW, AV / RV have to be controlled via input B1 (+) with voltage against A2. The control signal could be the same as the auxiliary/control voltage of A1 or any other voltage between 12 and 240 V AC or DC. Operating a parallel load between B1 and A2 is also possible.

If with function IF the inputs A1 and B1 are controlled simultaneously a pulse with the adjusted length is started. With the variant MK 7850N/500 the output pulse can be disabled by setting the slide switch in Position "B".

**Time interruption and time addition with X3**
On all functions, also with RV,IF, AW (EW/AW) and AB/RV the time delay can be interrupted during timing by bridging the terminals
X2 - X3. By opening the bridge the time continues (time addition).
While X2 and X3 are bridged the control input is disabled and the yellow LED remains in the state it had at stop. No external voltage must be connected to X2 and X3 as the unit may be damaged.

**Remote potentiometers**
Both settings on variant MK 7850N/500 can also be made by remote potentiometers of 10 kOhms:
- terminals Z1 - Z2: potentiometer for time t1
- terminals Z2 - Z3: potentiometer for time t2

When connecting a remote potentiometer the corresponding potentiometer has to be set to min. If no remote potentiometers are required the terminals Z1-Z2 resp. Z2-Z3 have to be linked.
The wires to the remote potentiometers should be installed separately from the lines with mains voltage. If this is not possible, a screened cable is recommendet where the shield is connected to Z2.
To terminals Z1, Z2 and Z3 no external voltage must be connected, as the unit might be damaged.

**Additional function**
With the variant MK 7850N/500 additional features can be selected for the functions position 3, 4 and 7 using the slide switch S1 on the relay front in position "B". At the same time a second time setting t2 is available on the lower potentiometer (see Function Diagram) the time range is the same as for t1.

## Setting

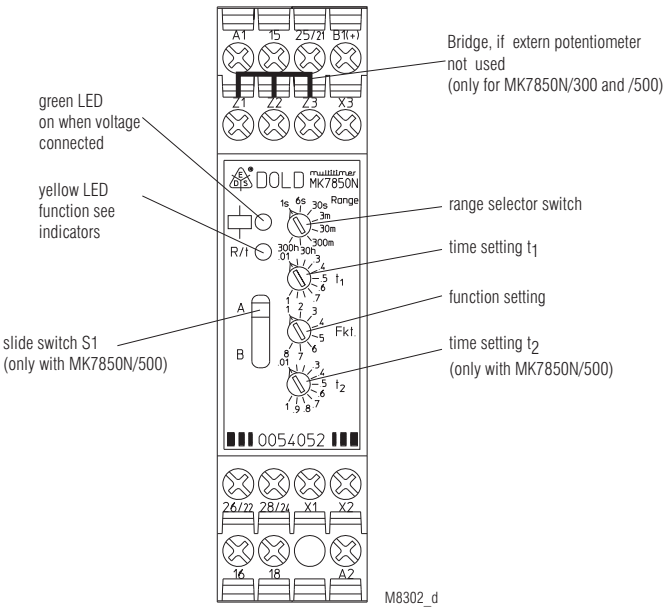


**Attention**
If no remote potentiometers at MK 7850N/500 are required the terminals Z1-Z2 resp. Z2-Z3 have to be linked.

## Technical Data

### Time circuit

| | | |
|---|---|---|
| **Time ranges:** | 8 time ranges in one unit, settable via rotational switch | |
| | 0.02 ... 1 s | 0.3 ... 30 min |
| | 0.06 ... 6 s | 3 ... 300 min |
| | 0.3 ... 30 s | 0.3 ... 30 h |
| | 0.03 ... 3 min | 3 ... 300 h |
| **Time setting t1, t2:** | continuous, 1:100 on relative scale (t2 only at MK 7850N/500) | |
| **Recovery time:** | | |
| at DC 24 V: | approx. 15 ms | |
| at DC 240 V: | approx. 50 ms | |
| at AC 230 V: | approx. 80 ms | |
| **Repeat accuracy:** | ± 0.5 % of selected end of scale value + 20 ms | |
| **Voltage and temperature influence:** | < 1 % with the complete operating range | |

### Input

| | | |
|---|---|---|
| **Nominal voltage $U_N$:** | AC/DC 12 ... 240 V | |
| **Voltage range:** | 0.8 ... 1.1 $U_N$ | |
| **Release voltage (A1/A2)** | | |
| | Delayed contact | |
| AC 50 Hz: | approx. 7.5 V | |
| DC: | approx. 7 V | |
| | Instantaneous contact | |
| AC 50 Hz: | approx. 3 V | |
| DC: | approx. 3.3 V | |
| **Max. permitted residual current with 2-wire proximity sensor control (A1-A2)** | | |
| up to AC/DC 150 V: | AC resp. DC 5 mA | |
| up to AC/DC 264 V: | AC resp. DC 3 mA | |
| **Control current B1:** | approx. 1mA, over complete voltage range | |
| **Min. on/off time of control input B1(+):** | | |
| AC 50 Hz: | approx. 15 ms / approx. 60 ms | |
| DC: | approx. 5 ms / approx. 60 ms | |
| **Release voltage (B1/A2)** | | |
| AC 50 Hz: | approx. 3.5 V | |
| DC: | approx. 3 V | |
| **Nominal power consumption** | | |
| AC 12 V: | approx. 1.5 VA | |
| AC 24 V: | approx. 2 VA | |
| AC 240 V: | approx. 3 VA | |
| DC 12 V: | approx. 1 W | |
| DC 24 V: | approx. 1 W | |
| DC 240 V: | approx. 1 W | |
| **Nominal frequency:** | 45 ... 400 Hz | |

### Output

| | | |
|---|---|---|
| **Contacts** | | |
| MK 7850N.82: | 2 changeover contacts, one programmable as instantaneous contact: | |
| without bridge X1-X2: | 25-26-28 delayed changeover contact | |
| with bridge X1-X2: | 21-22-24 instantaneous contact at $U_N$ on A1-A2 | |
| **Contact material:** | AgNi | |
| **Measured nominal voltage:** | AC 250 V | |
| **Thermal current $I_{th}$:** | see quadratic total current limit curve (max. 4 A per contact) | |
| **Switching capacity** | | |
| to AC 15 | | |
| NO contact: | 3 A / AC 230 V | IEC/EN 60 947-5-1 |
| NC contact: | 1 A / AC 230 V | IEC/EN 60 947-5-1 |
| to DC 13 at 0.1 Hz: | 1 A / DC 24 V | IEC/EN 60 947-5-1 |
| **Electrical life** | | IEC/EN 60 947-5-1 |
| to AC 15 at 1 A, AC 230 V: | 1.5 x $10^5$ switching cycles | |
| **Permissible switching frequency:** | 36 000 switching cycles / h | |
| **Short circuit strength max. fuse rating:** | 4 A gL | IEC/EN 60 947-5-1 |
| **Mechanical life:** | ≥ 30 x $10^6$ switching cycles | |

## Technical Data

### General Data

| | | |
|---|---|---|
| **Operating mode:** | Continuous operation | |
| **Temperature range** | | |
| Operation: | - 40 ... + 60 °C (higher temperature see quadratic total current limit curve) | |
| Storage: | - 40 ... + 70 °C | |
| **Relative air humidity:** | 93 % at 40 °C | |
| **Altitude:** | < 2.000 m | |
| **Clearance and creepage distances** | | |
| rated impulse voltage / pollution degree: | 4 kV / 2 (basis insulation) | IEC 60 664-1 |
| Overvoltage category: | III | |
| Insulation test voltage, type test: | 2.5 kV; 1 min | |
| **EMC** | | |
| Electrostatic discharge: | 8 kV (air) | IEC/EN 61 000-4-2 |
| HF-irradiation | | |
| 80 MHz ... 1 GHz: | 20 V / m | IEC/EN 61 000-4-3 |
| 1 GHz ... 2.7 GHz: | 10 V / m | IEC/EN 61 000-4-3 |
| Fast transients: | 2 kV | IEC/EN 61 000-4-4 |
| Surge voltages between | | |
| wires for power supply: | 2 kV | IEC/EN 61 000-4-5 |
| between wire and ground: | 4 kV | IEC/EN 61 000-4-5 |
| HF-wire guided: | 10 V | IEC/EN 61 000-4-6 |
| Interference suppression: | Limit value class B | EN 55 011 |
| **Degree of protection** | | |
| Housing: | IP 40 | IEC/EN 60 529 |
| Terminals: | IP 20 | IEC/EN 60 529 |
| **Housing:** | Thermoplastic with V0 behaviour according to UL subject 94 | |
| **Vibration resistance:** | Amplitude 0.35 mm, frequency 10 ... 55 Hz, | IEC/EN 60 068-2-6 |
| **Climate resistance:** | 40 / 060 / 04 | IEC/EN 60 068-1 |
| **Terminal designation:** | | EN 50 005 |
| **Wire connection** | | DIN 46 228-1/-2/-3/-4 |
| **Screw terminals (integrated):** | 1 x 4 $mm^2$ solid or<br>1 x 2.5 $mm^2$ stranded ferruled or<br>2 x 1.5 $mm^2$ stranded ferruled or<br>2 x 2.5 $mm^2$ solid | |
| Insulation of wires or sleeve length: | 8 mm | |
| **Plug in with screw terminals** | | |
| max. cross section for connection: | 1 x 2.5 $mm^2$ solid or<br>1 x 2.5 $mm^2$ stranded ferruled | |
| Insulation of wires or sleeve length: | 8 mm | |
| **Plug in with cage clamp terminals** | | |
| max. cross section for connection: | 1 x 4 $mm^2$ solid or<br>1 x 2.5 $mm^2$ stranded ferruled | |
| min. cross section for connection: | 0.5 $mm^2$ | |
| Insulation of wires or sleeve length: | 12 $^{\pm 0.5}$ mm | |
| **Wire fixing:** | Plus-minus terminal screws M 3.5 box terminals with wire protection or cage clamp terminals | |
| **Wire fixing:** | Box terminals with wire protection | |
| **Fixing torque:** | 0.8 Nm | |
| **Mounting:** | DIN rail | IEC/EN 60 715 |
| **Weight:** | approx. 150 g | |

### Dimensions

| | |
|---|---|
| **Width x heigth x depth** | |
| MK 7850N/200: | 22.5 x 90 x 97 mm |
| MK 7850N/200 PC: | 22.5 x 111 x 97 mm |
| MK 7850N/200 PS: | 22.5 x 104 x 97 mm |

## Classification to DIN EN 50155

| | | |
|---|---|---|
| **Vibration and shock resistance:** | Category 1, Class B | IEC/EN 61 373 |
| **Ambient temperature:** | T1, T2 compliant<br>T3 and TX with operational limitations | |
| **Protective coating of the PCB:** | No | |

## UL-Data

**Switching capacity:**

| | |
|---|---|
| Ambient temperature 60°C: | Pilot duty B300<br>5A 250Vac G.P. |
| **Wire connection:** | 60°C / 75°C copper conductors only |
| Screw terminals fixed: | AWG 20 - 12 Sol/Str Torque 0.8 Nm |
| Plug in screw: | AWG 20 - 14 Sol Torque 0.8 Nm<br>AWG 20 - 16 Str Torque 0.8 Nm |
| Plug in cage clamp: | AWG 20 - 12 Sol/Str |

**Technical data that is not stated in the UL-Data, can be found in the technical data section.**

## CCC-Data

**Switching capacity:**
to AC 15
NO contact: 1.5 A / AC 230 V

**Technical data that is not stated in the CCC-Data, can be found in the technical data section.**

## Standard Types

MK 7850N.82/200/61 AC/DC 12 ... 240 V

| | |
|---|---|
| Article number: | 0056618 |
| • Output: | 2 changeover contacts, one programmable as instantaneous contact |
| • Nominal voltage $U_N$: | AC/DC 12 ... 240 V |
| • Time ranges: | from 0.02 s ... 300 h |
| • Width: | 22.5 mm |

## Variants

| | |
|---|---|
| MK 7850N.82/300: | 8 functions with connection facility for 1 remote potentiometer 10 kΩ (t1). |
| MK 7850N.82/500: | second time setting t2, connection facility for 2 remote potentiometers 10 kΩ to adjust t1 and t2,<br>2 additional functions selectable via slide switch S1:<br>- Cyclic timer, start with break (TP)<br>- Fleeting on make and break (EW/AW) |

**Ordering example for variants**

MK 7850N .82 _ _ /_ _ _ /61 AC/DC 12 ... 240 V

- AC/DC 12 ... 240 V: Nominal voltage
- /61: with UL-approval (Canada / USA)
- /_ _ _: Variant
- _ _: Type of terminals
  - without indication: terminal blocks fixed, with screw terminals
  - PC (plug in cage clamp): pluggable terminal blocks with cage clamp terminals
  - PS (plug in screw): pluggable terminal blocks with screw terminals
- .82: Contacts
- MK 7850N: Type

## Options with Pluggable Terminal Blocks

Screw terminal
(PS/plugin screw)

Cage clamp
(PC/plugin cage clamp)

## Notes

Removing the terminal blocks with cage clamp terminals

1. The unit has to be disconnected.
2. Insert a screwdriver in the side recess of the front plate.
3. Turn the screwdriver to the right and left.
4. Please note that the terminal blocks have to be mounted on the belonging plug in terminations.

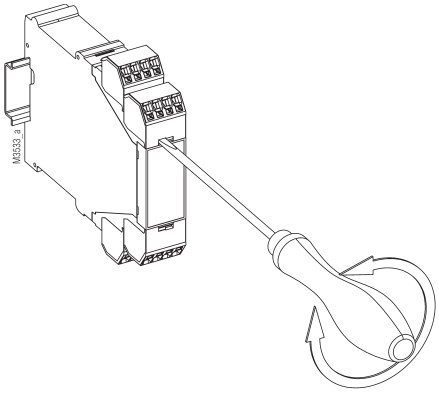

## Characteristic

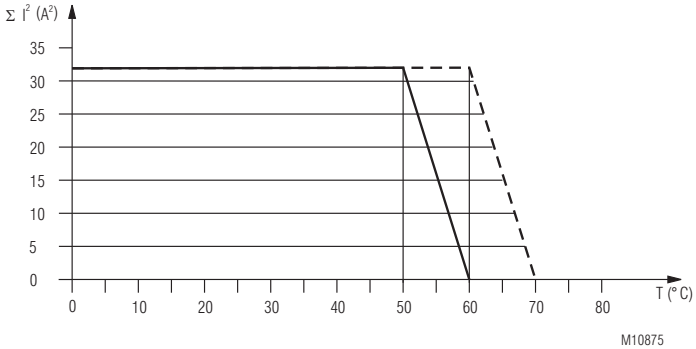


device mounted away from heat generation components.

device mounted without distance heated by devices with same load.

quadratic total current limit curve

## Accessories

AD 3: External potentiometer 10 kΩ
Article number: 0028962

The external potentiometer is used for remote setting of the time delay. The internal potentiometer of the timer must be set to min. time delay.

Degree of protection front side: IP 60

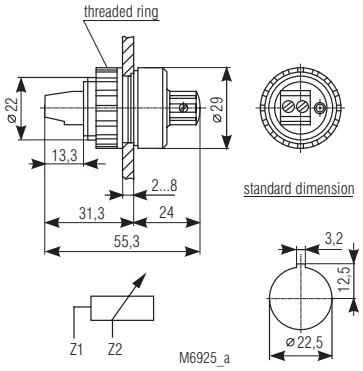


## Connection Examples

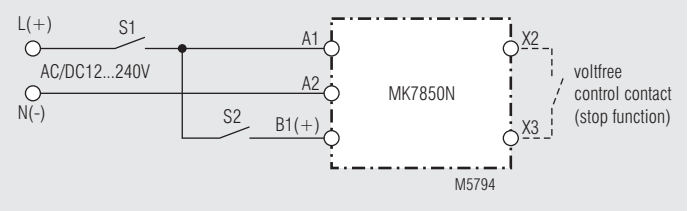


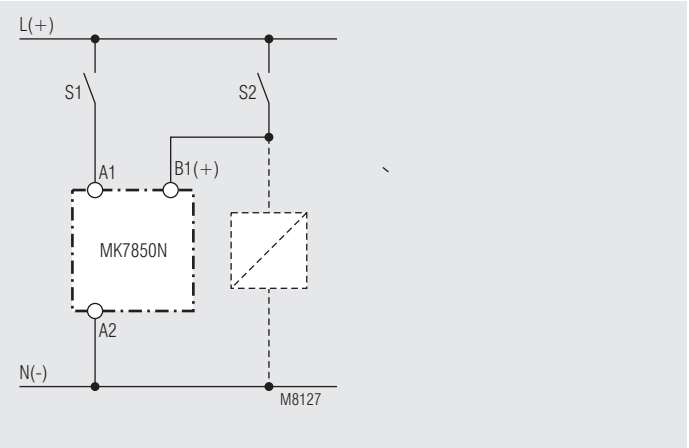


Control with parallel connected load

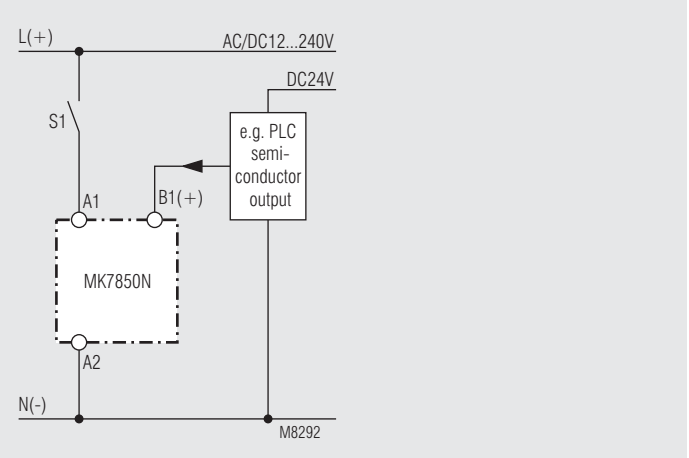


Connection with 2 different control voltages.

# MULTITIMER
## Multifunction Relay
## SN 7920

0276442

### Circuit Diagrams

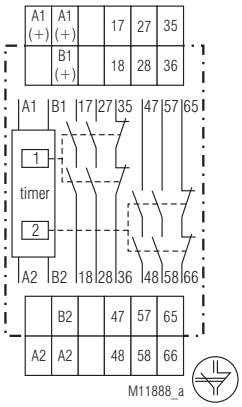


SN 7920

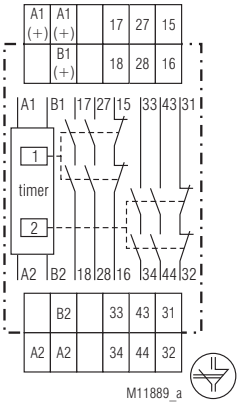


SN 7920/001

### Your Advantages
- Higher flexibility (8 function in one unit)
- To switch high DC-loads (DC 110 V) with mechanical forcibly guided contacts according to IEC 61810-3

### Features
- According to IEC/EN 61 812-1, DIN EN 50155
- 8 functions settable via rotational switch:
  - Delay on energisation (AV)
  - Fleeting on make (EW)
  - Delay pulse (IE)
  - Flasher, start with pulse (BI)
  - Delay on de-energisation (RV)
  - Pulse forming function (IF)
  - Fleeting on break (AW)
  - Delay on energisation and de-energisation (AV / RV)
- 8 time ranges from 0.05 s ... 300 h selectable via rotational switches
- Voltage range AC/DC 24 ... 230 V
- High DC switching capacity
- With time interruption / time adding input
- Adjustment aid for quick setting of long time values
- Contacts:
  - 1 NC + 2 NO delayed
  - 1 NC + 2 NO delayed or instantaneous
- LED indicators for operation, contact position and time delay
- DIN rail or screw mounting
- 52.5 mm width

### Approvals and Markings

CE

### Applications

Time dependent controls for industrial and railway applications.

### Connection Terminals

| Terminal designation | Signal description |
|---|---|
| A1(+) / A2 | Auxiliary voltage |
| B1(+) / B2 | Control input, dependent of 3position rotational switch |
| 17, 18 ; 27, 28 | Forcibly guided NO contacts Relay 1 |
| 35, 36 ; 15, 16[1)] | Forcibly guided NC, Relay 1 |
| 47, 48 ; 57, 58<br>33, 34[1)] ; 43, 44[1)] | Forcibly guided NO contacts Relay 2 |
| 65, 66 ; 31, 32[1)] | Forcibly guided NC, Relay 2 |
| [1)] at SN 7920/001 | |

### Indicators

| | |
|---|---|
| green LED: | on, when voltage connected |
| yellow LED "R/t": | shows status of output relay and time delay: |
| - Continuously off: | output relay not active; no time delay |
| - Continuously on: | output relay active; no time delay |
| - Flashing (short on, long off) | output relay not active; time delay |
| - Flashing (long on, short off) | output relay active; time delay |
| yellow LED (right) 1: | shows status of delayed relay |
| yellow LED (right) 2: | shows status of delayed / instantaneous relay |

## Function Diagram for delayed output relay (relay 1)

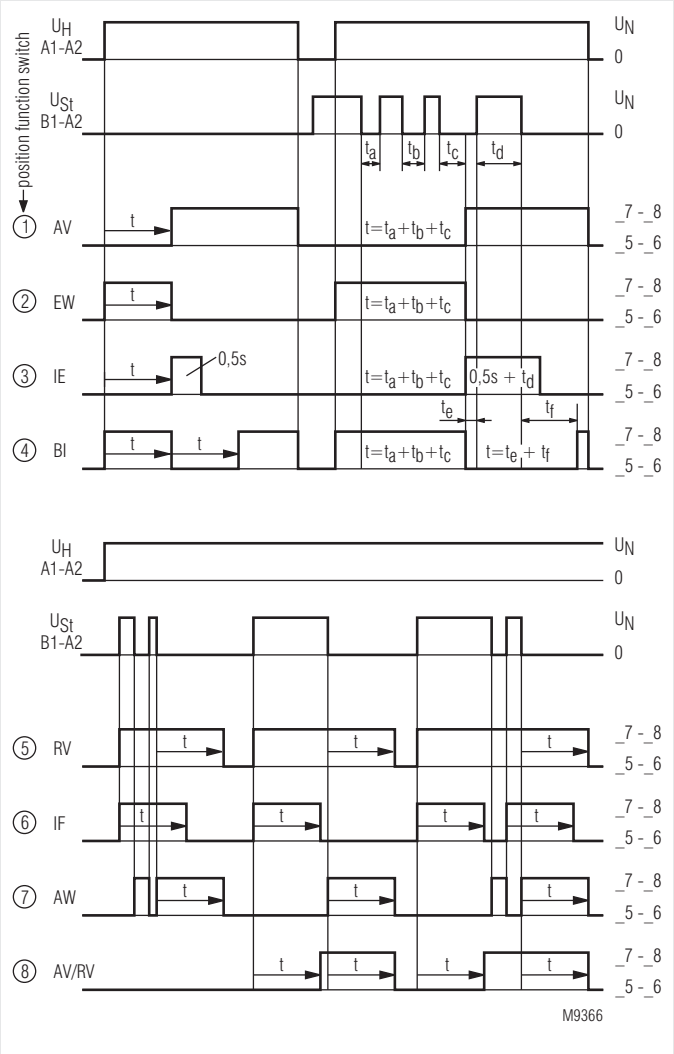


① ... ⑧ = position of function switch

| | | | | | |
|---|---|---|---|---|---|
| ① | AV | = Delay on energisation | ⑤ | RV | = Delay on de-energisation |
| ② | EW | = Fleeting on make | ⑥ | IF | = Pulse forming function |
| ③ | IE | = Delayed pulse | ⑦ | AW | = Fleeting on break |
| ④ | BI | = Flasher, start with pulse | ⑧ | AV/RV | = Delay on energisation and de-energisation |

## Function of Relay 2

The function of relay 2 can be altered with the 3position rotational switch:

Timer: relay 2 has function of relay 1

A1(+) / A2: relay 2 functions as instantaneous relay controlled by A1(+)/A2

B1(+) / B2: relay 2 functions as instantaneous relay controlled by B1(+)/B2

## Setting

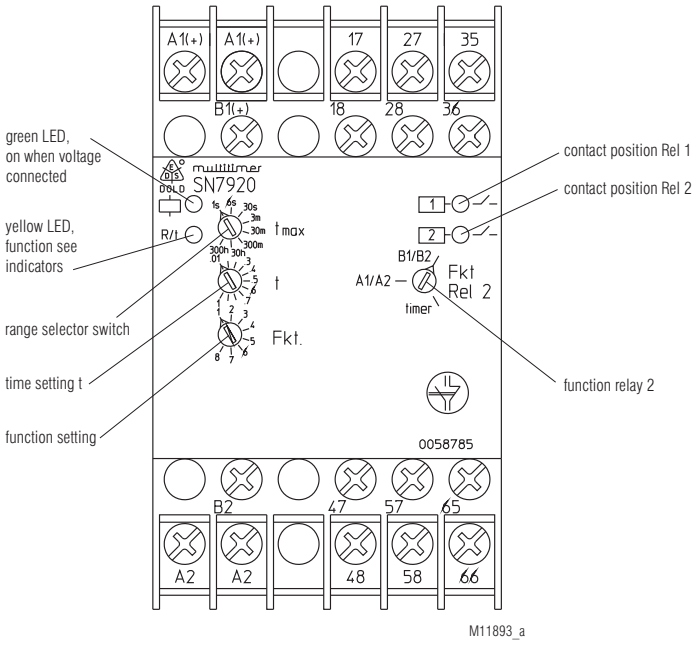


## Notes for setting

**Function- and time range setting**

The function and time setting via rotary switches are enabled only when the auxiliary voltage is connected. Changing of these rotary switches while during operation does not take an effect

**Adjustment assistance**

The flashing period of the yellow LED is 1 s ± 4% and can be used to adjust the time. Especially on the lower end of scale and for long times it is suitable as the multiplication factors between the different time ranges are exact without tolerance.

Example:

The required time is 40 min. It has to be adjusted within the range 3 ... 300 min. The time check takes too long as several timing cycles would be necessary for a precise value.

For faster adjustment the setting is made to 0.03 ... 3 min. On this range the potentiometer should be set to 0.4 min (= 24 sec). With the right potentiometer setting the LED must show 24 flashing cycles. After that the time range is switched over to 3 ... 300 min and the setting is complete.

**Time interruption / Time adding**

The timing cycle can be interrupted by controlling input B1(+) with control voltage. Removing the control signal will continue the timing cycle (time addition).

**Control input B1(+) / B2(-) (galvanic separated)**

The functions RV, IF, AW, AV / RV have to be controlled via control input B1(+) / B2. Example: With external link A2 / B2 input B1(+) can be operated with positive voltage against A1(+) or with external link A1(+) / B1(+) input B2 can be operated with negative voltage against A2.

If with function IF the inputs B1(+) and A1 are controlled simultaneously, (link B2 / A2 existing) a pulse with the adjusted length is started.

## Technical Data

### Time Circuit

| | |
|---|---|
| **Time ranges:** | 8 time ranges in one unit, settable via rotational switch<br>0.05 ... 1 s  0.3 ... 30 min<br>0.06 ... 6 s  3 ... 300 min<br>0.3 ... 30 s  0.3 ... 30 h<br>0.03 ... 3 min  3 ... 300 h |
| **Time setting t:** | continuous, 1:100 on relative scale |
| **Recovery time:** | |
| A1(+) / A2: | ≤ 100 ms |
| **Repeat accuracy:** | ± 0.5 % of selected end of scale value + 20 ms |
| **Voltage and temperature influence:** | < 1 % with the complete operating range |

### Input

| | |
|---|---|
| **Auxiliary voltage A1(+) / A2** | |
| Nominal voltage $U_N$: | AC/DC 24 ... 230 V |
| Voltage range: | AC 0.7 ... 1.1 $U_N$ ; DC 0.8 ... 1.25 $U_N$ |
| **Control input B1(+) / B2** | galvanic separated |
| Nominal voltage $U_N$: | AC/DC 12 ... 230 V |
| Voltage range: | AC 0.7 ... 1.1 $U_N$ ; DC 0.8 ... 1.25 $U_N$ |
| Control current: | 1.3 mA |
| **Release voltage B1(+) / B2** | |
| AC / DC | approx. 7 V |
| **Nominal power consumption** | |
| AC 24 ... 230 V: | approx. 4 VA |
| DC 24 V: | approx. 3 W |
| DC 110 V: | approx. 2.5 W |
| **Nominal frequency:** | 45 ... 400 Hz |
| **Min. on/off time of control input B1(+) / B2** | |
| AC 50 Hz: | approx. 20 ms / ca. 30 ms |
| DC: | approx. 6 ms / ca. 30 ms |

### Output

| | |
|---|---|
| **Contacts**: | 2 NO contacts, 1 NC contact delayed<br>2 NO contacts, 1 NC contact delayed or as instantaneous contact parametrizable |
| **Contact material:** | $AgSnO_2$ + 0,2 µm Au |
| **Measured nominal voltage:** | AC 250 V |
| **Thermal current $I_{th}$:** | max. 6 A / contact<br>(see quadratic total current limit curve) |
| **Switching capacity** | IEC/EN 60 947-5-1 |
| to AC 15 | |
| NO contacts: | 3 A / AC 230 V |
| NC contacts: | 2 A / AC 230 V |
| to DC 13: | 1 A / DC 110 V |
| to DC 13 at 0.1 Hz: | 8 A / DC 24 V |
| **Electrical life** | IEC/EN 60 947-5-1 |
| NO contacts | |
| at 3 A, AC 230 V: | 1 x $10^5$ switching cycles |
| at 2 A, AC 230 V: | 2.5 x $10^5$ switching cycles |
| at 1 A, AC 230 V: | 1 x $10^6$ switching cycles |
| NC contacts | |
| at 2 A, AC 230 V: | 50000 switching cycles |
| at 0.5 A, AC 230 V: | 1 x $10^6$ switching cycles |
| at 5 A, AC 230 V cos φ = 1: | 2 x $10^5$ switching cycles |
| at 8 A, AC 230 V cos φ = 1: | 1 x $10^5$ switching cycles |
| to DC 1 at 2 A, DC 110 V: | 5 x $10^5$ switching cycles |
| to DC 13 at 0.5 A, DC 110 V: | 5 x $10^5$ switching cycles |
| to DC 13 at 1 A, DC 24 V: | 5 x $10^5$ Schaltspiele |
| **Short circuit strength:** | 1 kA / AC 250 V |
| **Max. fuse rating:** | 10 A gG / gL;<br>machine C8  IEC/EN 60 947-5-1 |
| **Mechanical life:** | ≥ 30 x $10^6$ switching cycles |

## Technical Data

### General Data

| | | |
|---|---|---|
| **Operating:** | Continous | |
| **Temperature range** | | |
| Operation: | - 40 ... + 75 °C | |
| Storage: | - 40 ... + 75 °C | |
| **Altitude:** | < 2.000 m | |
| **Clearance and creepage distances** | IEC 60 664-1 | |
| Rated voltage: | 300 V | |
| Overvoltage category: | III | |
| Rated impulse voltage / pollution degree: | | |
| Auxiliary voltage A1(+) / A2 / control input B1(+) / B2 | 6 kV / 2 | |
| Auxiliary voltage A1(+) / A2 / contacts: | 6 kV / 2 | |
| Control input B1(+) / B2 / contacts: | 6 kV / 2 | |
| contact / contact: | 4 kV / 2 (basis insulation) | |
| Insulation test voltage, type test: | 2,5 kV; 1 min | |
| **EMC** | | |
| Electrostatic discharge: | 8 kV (air) | IEC/EN 61 000-4-2 |
| HF-irradiation | | |
| 80 MHz ... 6 GHz: | 20 V / m | IEC/EN 61 000-4-3 |
| Fast transients: | 4 kV | IEC/EN 61 000-4-4 |
| Surge voltages between wires for power supply: | 2 kV | IEC/EN 61 000-4-5 |
| between wire and ground: | 4 kV | IEC/EN 61 000-4-5 |
| HF-wire guided: | 10 V | IEC/EN 61 000-4-6 |
| Interference suppression: | Limit value class B | EN 55011 |
| **Degree of protection** | | |
| Housing: | IP 40 | IEC/EN 60 529 |
| Terminals | IP 20 | IEC/EN 60 529 |
| **Housing:** | Thermoplastic with V0 behaviour according to UL subject 94 | |
| **Vibration resistance:** | Amplitude 0.35 mm, frequency 10 ... 150 Hz | IEC/EN 60 068-2-6 |
| **Climate resistance:** | 40 / 060 / 04 | IEC/EN 60 068-1 |
| **Terminal designation:** | EN 50 005 | |
| **Wire connection:** | 2 x 2.5 $mm^2$ solid or<br>2 x 1.5 $mm^2$ stranded wire with sleeve | DIN 46 228/-1/-2/-3/-4 |
| Insulation of wires or sleeve length: | 10 mm | |
| **Wire fixing:** | Flat terminal with self-lifting clamping piece | IEC/EN 60 999-1 |
| **Fixing torque:** | 0,8 Nm | |
| **Mounting:** | DIN rail mounting (IEC/EN60715) or screw mounting M4, 90 mm hole pattern, with additional clip available as accessory | |
| **Weight:** | 280 g | |

### Dimensions

| | |
|---|---|
| **Width x height x depth:** | 52.5 x 90 x 98 mm |

## Classification to DIN EN 50155

| | | |
|---|---|---|
| **Vibration and shock resistance:** | Category 1, Class B | IEC/EN 61 373 |
| **Ambient temperature:** | T1, T2, T3, TX compilant | |
| **Protective coating of the PCB:** | No | |

## Standard Type

SN 7920.54  AC/DC 24 ... 230 V

| | |
|---|---|
| Article number: | 0058785 |
| • Output: | 2 x 2 NO, 2 NC contacts |
| • Nominal voltage $U_N$: | AC/DC 24 ... 230 V |
| • Time ranges: | from 0.05 s ... 300 h |
| • Width: | 52.5 mm |

## Variant

| | |
|---|---|
| SN 7920/001 | different terminal designation<br>see Circuit Diagram |

## Accessories

| | |
|---|---|
| ET 4086-0-2: | Additional clip for screw mounting<br>Article number: 0046578 |

## Characteristic

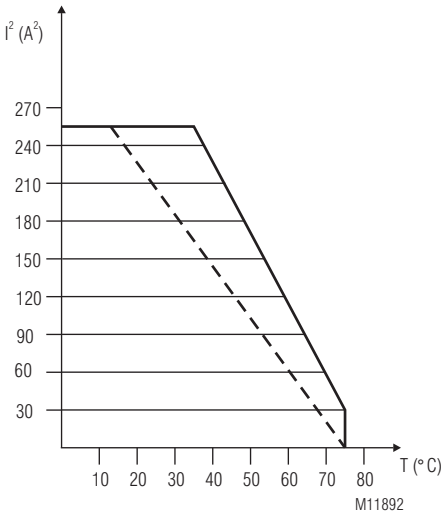


device mounted on distance with air circulation

device mounted without distance heated by devices with same load

$$\Sigma I^2_{th} = I^2_{th1} + I^2_{th2} + I^2_{th3} + I^2_{th4}$$

$I_{th1}$, $I_{th2}$, $I_{th3}$, $I_{th4}$: current in contact paths

Quadratic total current limit curve

## Application Examples

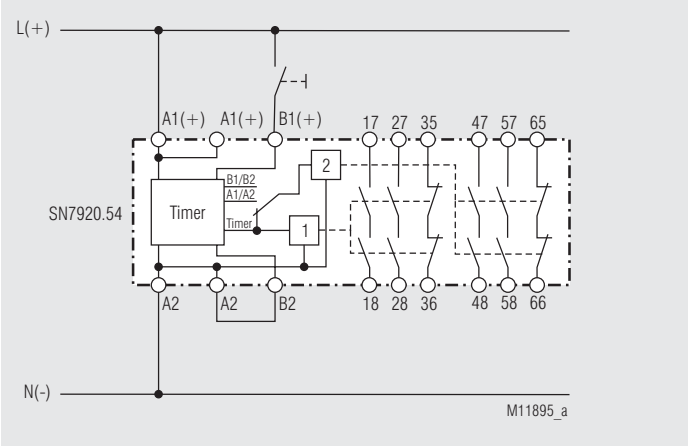


SN 7920

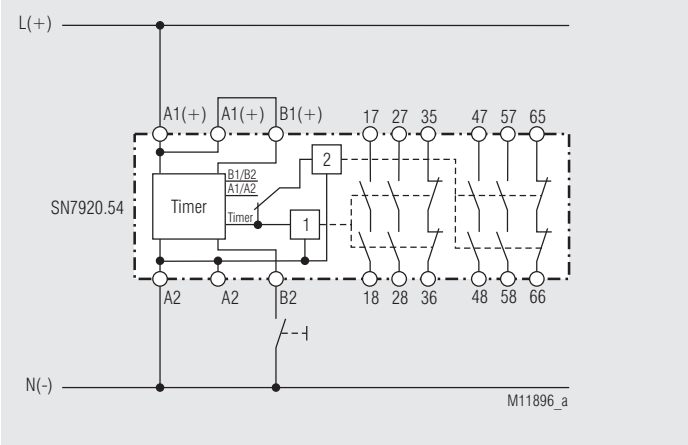


SN 7920/001

# MINITIMER
# Flasher Relay
# IK 7816, SK 7816

0222114

- According to IEC/EN 61 812-1
- Pulse time up to 100 s
- Adjustable flashing time
- Repeat accuracy ≤ 1 %
- Start with a pulse
- LED indicator for contact position
- 1 changeover contact
- Devices available in 2 enclosure versions:
  IK 7816: depth 58 mm, with terminals at the bottom for installation systems and industrial distribution systems according to DIN 43 880
  SK 7816: depth 98 mm, with terminals at the top for cabinets with mounting plate and cable ducts
- Width 17.5 mm

## Function Diagram

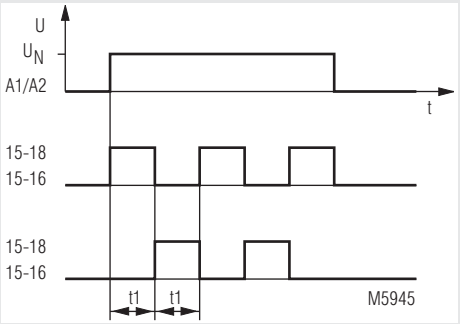


## Circuit Diagram

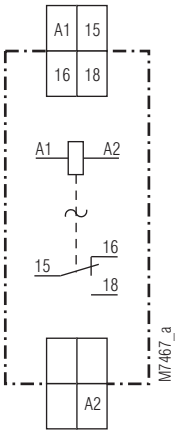


## Connection Terminals

| Terminal designation | Signal description |
|---|---|
| A1 | L / + |
| A2 | N / - |
| 15, 16, 18 | Changeover contact |

## Approvals and Markings

CE

## Application

Time-based control equipment

## Indicator

LED: on when the output relay is activated (contact 15 - 18 is closed)

## Notes

A change of the time setting is directly valid.
If a time is changed during time elaps, the output relay may energise unintended.

## Technical Data

### Time circuit

| | | |
|---|---|---|
| **Time range:** | 0.1 ... 1 s = 300 ... 30 pulses/min | |
| | 0.3 ... 3 s | |
| | 1 ... 10 s | |
| | 3 ... 30 s | |
| | 10 ... 100 s | |
| | 1 ... 10 min | |
| | 3 ... 30 min | |
| | 6 ... 60 min | |
| **Pulse duty factor:** | 1 : 1 | |
| **Setting:** | Infinitely variable, on relative scale | |
| **Recovery time** | | |
| tw 50 / 100: | < 60 ms | |
| **Repeat accuracy:** | 0.1 % | |
| **Voltage influence:** | ≤ 1 % at 0.8 ... 1.1 $U_N$ | |
| **Temperature influence:** | 0.05 % / K | |

### Input

| | | |
|---|---|---|
| **Nominal voltage $U_N$:** | AC/DC 12 V, AC/DC 24 V, AC 110 ... 127 V, AC 220 ... 240 V | |
| **Voltage range:** | 0.8 ... 1.1 $U_N$ with AC and DC 48 % residual ripple | |
| | 0.9 ... 1.25 $U_N$ in battery operating mode | |
| **Release voltage:** | 15 % $U_N$ | |
| **Nominal consumption:** | AC/DC 24 V | 0.6 W |
| | AC 230 V 50 Hz | 3.5 VA |
| **Nominal frequency:** | 50 / 60 Hz | |
| **Frequency range:** | ± 5 % | |

### Output

| | | |
|---|---|---|
| **Contacts:** | 1 changeover contact | |
| **Contact material:** | $AgSnO_2$ | |
| **Measured nominal voltage:** | AC 250 V | |
| **Thermal current $I_{th}$:** | max. 10 A (see quadratic total current limit curve) | |
| **Switching capacity** | | |
| to AC 15 | | |
| NO contact: | 10 A / AC 230V | IEC/EN 60 947-5-1 |
| NC contact: | 5 A / AC 230 V | IEC/EN 60 947-5-1 |
| **Glow lamp load:** | 1200 W | |
| **Electrical life:** | | IEC/EN 60 947-5-1 |
| AC 15 at 3 A, AC 230 V: | 5 x $10^5$ switching cycles | |
| **Permissible switching frequency:** | 6 000 switching cycles/h | |
| **Short circuit strength** | | |
| max. fuse rating: | 10 AgL | IEC/EN 60 947-5-1 |
| max. line circuit breaker: | B16 | IEC/EN 60 947-5-1 |
| **Mechanical life:** | > 30 x $10^6$ switching cycles | |

### General Data

| | | |
|---|---|---|
| **Operating mode:** | Continuous operation | |
| **Temperature range:** | | |
| Operation: | - 20 ... + 60°C | |
| Storage: | - 25 ... + 70°C | |
| **Relative air humidity:** | 95 % at 40 °C | |
| **Altitude:** | < 2.000 m | |
| **Clearance and creepage distances** | | |
| Rated impulse voltage/ pollution degree: | 4 kV / 2 (base insulation) | IEC 60 664-1 |
| Overvoltage category: | III | |
| Insulation test voltage, type test: | 2.5 kV; 1 min | |
| **EMC** | | |
| Electrostatic discharge: | 8 kV (air) | IEC/EN 61 000-4-2 |
| HF irradiation | | |
| 80 MHz ... 1 GHz: | 10 V / m | IEC/EN 61 000-4-3 |
| 1 GHz ... 2.5 GHz: | 3 V / m | IEC/EN 61 000-4-3 |
| 2.5 GHz ... 2.7 GHz: | 1 V / m | IEC/EN 61 000-4-3 |
| Fast transients: | 4 kV | IEC/EN 61 000-4-4 |
| Surge voltages between | | |
| wires for power supply: | 2 kV | IEC/EN 61 000-4-5 |
| between wire and ground: | 4 kV | IEC/EN 61 000-4-5 |
| HF-wire guided: | 20 V | IEC/EN 61 000-4-6 |
| Interference suppression: | Limit value class B | EN 55 011 |

## Technical Data

### Degree of protection

| | | |
|---|---|---|
| Housing: | IP 40 | IEC/EN 60 529 |
| Terminals: | IP 20 | IEC/EN 60 529 |
| **Housing:** | Thermoplastic with V0 behaviour according to UL Subj. 94 | |
| **Vibration resistance:** | Amplitude 0.35 mm frequency 10 ... 55 Hz, | IEC/EN 60 068-2-6 |
| **Climate resistance:** | 20 / 060 / 04 | IEC/EN 60 068-1 |
| **Terminal designation:** | EN 50 005 | |
| **Wire connection:** | | DIN 46 228-1/-2/-3/-4 |
| Cross section: | 2 x 2,5 $mm^2$ solid or 2 x 1,5 $mm^2$ stranded ferruled | |
| Stripping length: | 10 mm | |
| **Wire fixing:** | Flat terminals with self-lifting clamping piece | IEC/EN 60 999-1 |
| **Fixing torque:** | 0.8 Nm | IEC/EN 60 999-1 |
| **Mounting:** | DIN rail | IEC/EN 60 715 |
| **Weight** | | |
| IK 7816: | 75 g | |
| SK 7816: | 94 g | |

### Dimensions

| | |
|---|---|
| **Width x height x depth** | |
| IK 7816: | 17.5 x 90 x 58 mm |
| SK 7816: | 17.5 x 90 x 98 mm |

### Standard Type

IK 7816.81 AC 220 ... 240 V 1 ... 10 s

| | |
|---|---|
| Article number: | 0033532 |
| • Output: | 1 changeover contact |
| • Nominal voltage $U_N$: | AC 220 ... 240 V |
| • Time range: | 1 ... 10 s |
| • Width: | 17.5 mm |

SK 7816.81 AC 220 ... 240 V 1 ... 10 s

| | |
|---|---|
| Article number: | 0052257 |
| • Output: | 1 changeover contact |
| • Nominal voltage $U_N$: | AC 220 ... 240 V |
| • Time range: | 1 ... 10 s |
| • Width: | 17.5 mm |

### Ordering Eexample

IK 7816 .81 AC 220 ... 240 V 1 ... 10 s

- 1 ... 10 s — Time range
- AC 220 ... 240 V — Nominal voltage
- .81 — Contacts
- IK 7816 — Type

## Characteristic

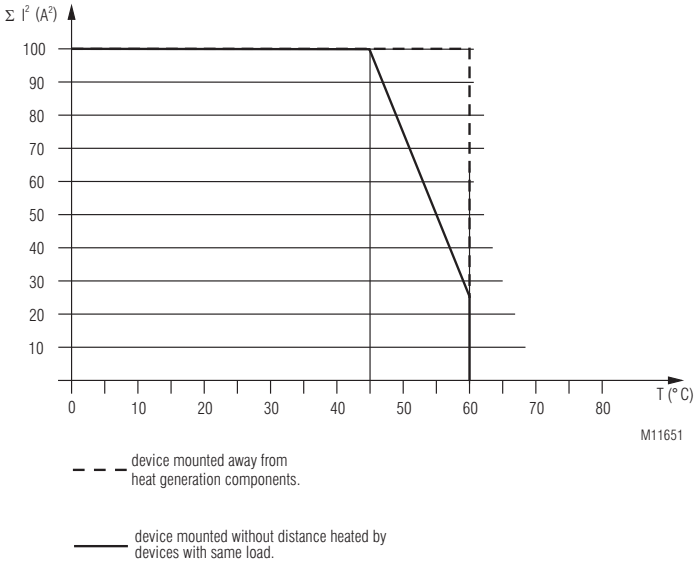


Quadratic total current limit curve

## Connection Example

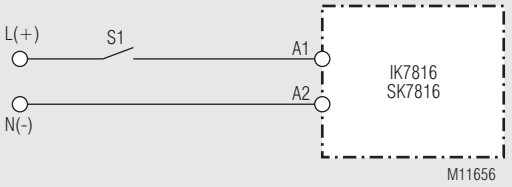

# MINITIMER
# Flasher Relay
# IK 7827

0221568

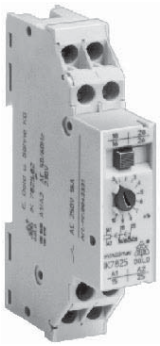

- According to IEC/EN 61 812-1
- Pulse time up to 100 s
- IK 7827 start with pulse
- IK 7827/100 start with pause
- Repeat accuracy ≤ 0.5 % + 10 ms
- Pushbutton for manual actuation of the contact
- 1 changeover contact for 16 A
- Width 17.5 mm

## Function Diagram

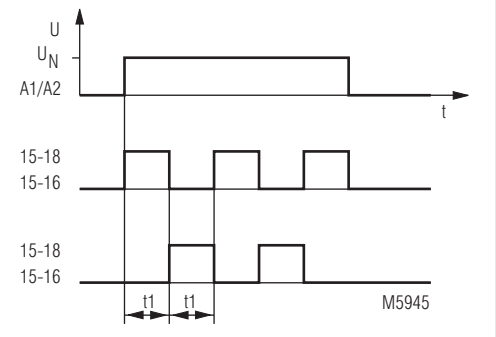


## Circuit Diagram

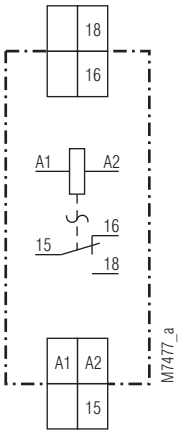


## Approvals and Markings

CE

## Application

- Time-dependent controllers

## Indicators

| | |
|---|---|
| Push button: | pressed, when relay energized |

## Technical Data

| | |
|---|---|
| **Time ranges:** | 0.05 ... 1 s<br>(equivalent to 600 ... 30 pulses / min.)<br>0.5 ... 10 s<br>5 ... 100 s |
| **Tolerance of end value:** | - 5 ... + 25 % of nominal value |
| **Time setting:** | steppless, 1:20 on relative scale |
| **Recovery time:** | approx. 60 ms<br>(during run-down o the pulse time)<br>approx. 700 ms<br>(during run-down of the pause time) |
| **Repeat accuracy:** | < ± 0.5 % + 10 ms |
| **Voltage influence:** | < 1 % over voltage range |
| **Temperature influence:** | < 0.1 % / K |

### Input

| | |
|---|---|
| **Nominal voltage $U_N$:** | AC 24, 230 V<br>DC 24 V |
| **Voltage range:** | 90 ... 110 % $U_N$ |
| **Nominal consumption** | |
| AC: | 2.3 VA |
| DC: | 1.5 W |
| **Nominal frequency:** | 50 Hz |
| **Frequency range:** | ± 5 % |

### Output

| | |
|---|---|
| **Contacts** | |
| IK 7827.81: | 1 changeover contact |
| **Release time of the contacts:** | < 30 ms |
| **Thermal current $I_{th}$:** | 16 A |
| **Electrical life** | at 500 switching cycles / h |
| under ohmic load AC 230 V: | 6 A 150 x $10^4$ switching cycles<br>10 A 72 x $10^4$ switching cycles<br>16 A 12 x $10^4$ switching cycles |
| Inductive load cos φ 0.6: | 10 A 10 x $10^4$ switching cycles |
| **DC load:** | see limit curve for arc-free operation |
| **Short circuit strength** | |
| **max. fuse rating:** | 16 A gL IEC/EN 60 947-5-1 |
| **Mechanical life:** | > 3 x $10^6$ switching cycles |

## Technical Data

### General Data

| | | |
|---|---|---|
| **Operating mode:** | Continuous operation | |
| **Temperature range:** | - 20 ... + 45 °C | |
| **Clearance and creepage distances** | | |
| rated impulse voltage / pollution degree: | 4 kV / 2 | IEC 60 664-1 |
| **EMC** | | |
| Electrostatic discharge: | 8 kV (air) | IEC/EN 61 000-4-2 |
| HF irradiation: | 10 V / m | IEC/EN 61 000-4-3 |
| Fast transients: | 4 kV | IEC/EN 61 000-4-4 |
| Surge voltages between | | |
| wires for power supply: | 2 kV | IEC/EN 61 000-4-5 |
| between wire and ground: | 4 kV | IEC/EN 61 000-4-5 |
| Interference suppression: | Limit value class B | EN 55 011 |
| **Degree of protection** | | |
| Housing: | IP 40 | IEC/EN 60 529 |
| Terminals: | IP 20 | IEC/EN 60 529 |
| **Housing:** | Thermoplastic with V0 behaviour according to UL subject 94 | |
| **Vibration resistance:** | Amplitude 0.35 mm, frequency 10 ... 55 Hz | IEC/EN 60 068-2-6 |
| **Climate resistance:** | 20 / 045 / 04 | IEC/EN 60 068-1 |
| **Terminal designation:** | EN 50 005 | |
| **Wire connection:** | 2 x 2.5 mm² solid or<br>2 x 1.5 mm² stranded ferruled<br>DIN 46 228-1/-2/-3/-4 | |
| **Wire fixing:** | Flat terminals with self-lifting clamping piece | IEC/EN 60 999-1 |
| **Fixing torque:** | 0.8 Nm | |
| **Mounting:** | DIN rail | IEC/EN 60 715 |
| **Weight:** | 100 g | |

### Dimensions

| | |
|---|---|
| **Width x height x depth:** | 17.5 x 89 x 58 mm |

### Standard Type

| | | | |
|---|---|---|---|
| IK 7827.81 | AC 230 V | 50 Hz | 0.5 ... 10 s |
| Article number: | | | 0043335 |
| • Output: | | | 1 changeover contacts |
| • Nominal voltage $U_N$: | | | AC 230 V |
| • Time range: | | | 0.5 ... 10 s |
| • Width: | | | 17.5 mm |

### Variant

| | |
|---|---|
| IK 7827.81/100: | start with break |

### Ordering example for variant

IK 7827 .81 / _ _ _ AC 230 V 50 Hz 1 s

- 1 s — Time range limit value
- 50 Hz — Nominal frequency
- AC 230 V — Nominal voltage
- _ _ _ — Variant, if required
- .81 — Contact
- IK 7827 — Type

## Characteristics

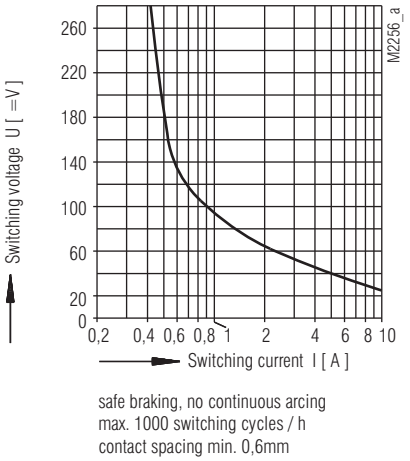


Limit curve for arc-free operation

# MINITIMER
## Time Relay With Operate Delay
## RK 7813, RK 7814, RK 7815, RK 7816

0257876

RK 7813, RK 7815, RK 7816

RK 7814

### Product Description

The timers of the RK series in compact stepped front enclosures fulfill all the demands to modern time control devices. With only a few variants this relay series covers all common timing functions, time ranges and voltage models. The single function modules are on delay range as well as fleeting on make or flasher timers. Besides the standard 1 c/o contact also a second c/o contact or an instantaneous c/o contact is available as option. Therefore these timers are suitable to realize most time depending controls in industry and building automation. As supplement also a multifunction timer with 8 functions is available in this series.

### Your Advantages

- Timers in compact design enclosures for consumer units
  - timer RK 7813 on delayed
  - timer RK 7814 on delayed
  - fleeting action relay RK 7815
  - flusher relay RK 7816

### Features

- According to IEC/EN 61 812-1
- RK 7813, RK 7815, RK 7816: Time ranges up to 10 h
- RK 7814: 4 time ranges up to 16 h
- LED indicator for state of contact
- Dual-voltage-version AC 230 V + AC/DC 24 V or AC 110 ... 127 V + AC/DC 24 V
- 1 changeover contact
- As option units with second changeover contact (only for voltage AC 230 V + AC/DC 24 )
  - on delayed
  - as instantaneous contact
- Start with impuls only for version RK 7816
- Start with space only for version RK 7816._ _ /_10
- As option with plug in terminal blocks for exchange of devices, available
  - with screw terminals
  - with cage clamp terminals
- Width: 17.5 mm

### Approvals and Markings

CE | c UL us LISTED * Canada / USA

* see variants

### Application

Time dependent controls

### Indicator

| | |
|---|---|
| LED: | on, when corresponding output relay is active (Contact 15 - 18 closed) |

## Function Diagrams

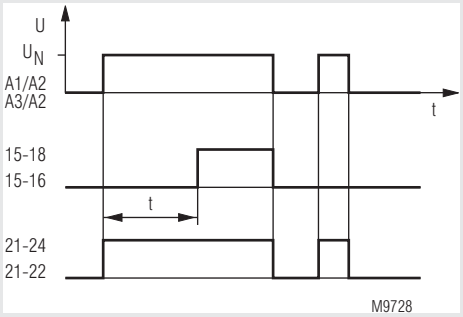


RK 7813, RK 7814

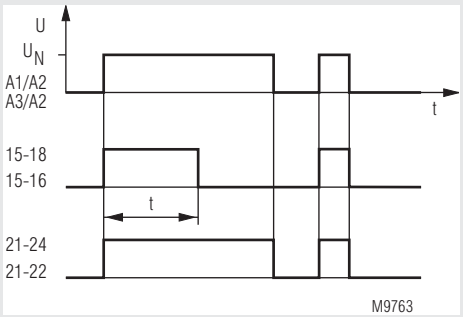


RK 7815

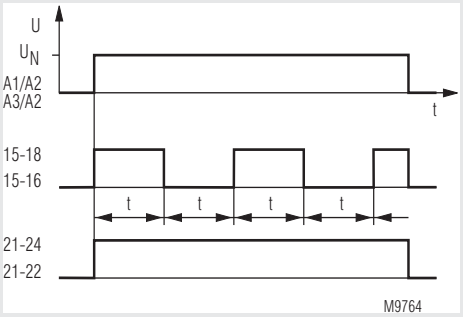


RK 7816

## Circuit Diagrams

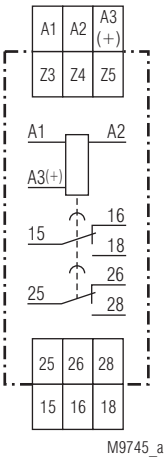


RK 7813.82
without Z3, Z4, Z5
RK 7814.82

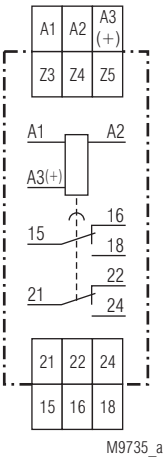


RK 7813.32
without Z3, Z4, Z5
RK 7814.32

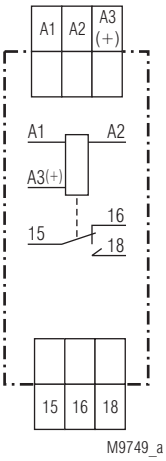


RK 7815.71

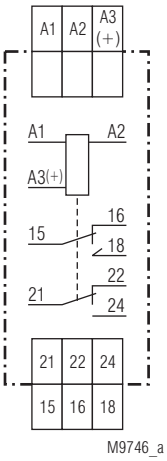


RK 7815.77

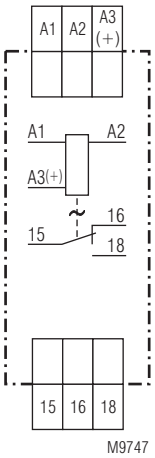


RK 7816.81

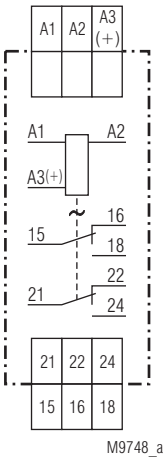


RK 7816.32

## Connection Terminals

| Terminal designation | Signal description |
|---|---|
| A1, A3(+), A2 | Auxiliary voltage |
| Z3, Z4, Z5 | Programming time ranges (RK7814) |
| 15, 16, 18 | 1. changeover contact (delayed) |
| 25, 26, 28<br>21, 22, 24 | 2. changeover contact (delayed)<br>2. changeover contact (instantaneous contact) |

## Time circuit

**Time ranges**

| | | | | | | | | |
|---|---|---|---|---|---|---|---|---|
| **RK 7813, RK 7815, RK 7816:** | 0,1 | ... | 1 | s | 1,0 | ... | 10 | min |
| | 1,0 | ... | 10 | s | 10 | ... | 100 | min |
| | 10 | ... | 100 | s | 1 | ... | 10 | h |

**Time ranges**
RK 7814: 4 time ranges are settable via terminals Z3-Z4-Z5

| Bridge Z3 Z4 Z5 | Device with second ranges | Device with minute ranges (on request) |
|---|---|---|
| 0 0—0 | 0.05 - 0.5 s | 0.4 - 4 min |
| 0———0 | 0.2 - 2 s | 1.5 - 15 min |
| 0—0—0 | 1.5 - 15 s | 12 - 120 min |
| 0 0 0 | 12 - 120 s | 96 - 960 min |

**Time setting:** infinite, 1:10 on relative scale
**Recovery time:** < 100 ms
**Repeat accuracy:** ≤ 0.5 % of set time delay + 10 ms
**Voltage influence:** ≤ 1 %
**Temperature influence:** 0.25 % / K

## Input

**Nominal voltage $U_N$:** AC/DC 24 V [1] + AC 230 V [2] or
AC/DC 24 V [1] + AC 110 ... 127 V [2]

[1] at terminals A3-A2
[2] at terminals A1-A2

**Voltage range**
AC: 0.8 ... 1.1 $U_N$
DC: 0.9 ... 1.25 $U_N$
**Release voltage A1 - A2:** AC 50 Hz approx. 40 V
**Release voltage A3 - A2:** DC approx. 5 V
**Nom. consumption AC 24 V:** approx. 1 VA
**Nom. consumption AC 230 V:** approx. 6 VA
**Nom. consumption DC 24 V:** approx. 0.4 W
**Nominal frequency:** 50 Hz / 60 Hz
**Frequency range:** ± 5 %

## Output

**Contacts**
RK 7813.81, RK 7814.81,
RK 7815.71, RK 7816.81: 1 changeover contact delayed (15-16-18)
RK 7813.82, RK 7814.82: 2 changeover contact delayed (15-16-18), (25-26-28)
RK 7813.32, RK 7814.32,
RK 7815.77, RK 7816.32: 1 changeover contact delayed (15-16-18)
1 changeover contact as instantaneous contact (21-22-24)
**Thermal current $I_{th}$:** 4 A
**Switching capacity**
according to AC 15
NO contact: 2 A / AC 230 V IEC/EN 60 947-5-1
NC contact: 1 A / AC 230 V IEC/EN 60 947-5-1
**Electrical life:** > 1 x $10^5$ switch. cycl. IEC/EN 60 947-5-1
**Mechanical life:** > 1 x $10^7$ switching cycles
**Permissible switching frequency**
(without / at load): 7200 / 360 switching cycles / h



## General Data

**Nominal operating mode:** continuous operation
**Temperature range:** - 40 ... + 60°C
**Clearance and creepage distance**
rated impulse voltage /
pollution degree: 4 kV / 2 IEC 60 664-1
**EMC**
Electrostatic discharge (ESD): 8 kV (air) IEC/EN 61 000-4-2
HF irradiation: 10 V/m IEC/EN 61 000-4-3
Fast transients: 4 kV IEC/EN 61 000-4-4
Surge voltage
between
wires for power supply: 2 kV IEC/EN 61 000-4-5
between wire and ground: 4 kV IEC/EN 61 000-4-5
HF-wire guided: 10 V IEC/EN 61 000-4-6
Interference suppression: Limit value class B EN 55 011
**Degree of protection**
Housing: IP 40 IEC/EN 60 529
Terminals: IP 20 IEC/EN 60 529
**Enclosure:** thermoplastic with VO behaviour according to UL Subject 94
**Vibration resistance:** Amplitude 0.35 mm
Frequency 10 ... 55 Hz, IEC/EN 60 068-2-6
**Climate resistance:** 40 / 060 / 04 IEC/EN 60 068-1
**Terminal designation:** EN 50 005
**Wire connection:** DIN 46 228-1/-2/-3/-4
**Fixed screw terminals**
Cross section: 0.34 ... 2.5 mm² (AWG 22 - 14) solid or
0.34 ... 2.5 mm² (AWG 22 - 14)
stranded wire with and without ferrules
Stripping length: 7 mm
**Wire fixing:** Captive slotted screw / M2.5
**Plug-in screw terminals**
Cross section: 0.2 ... 2.5 mm² (AWG 24 - 12) solid or
0.2 ... 2.5 mm² (AWG 24 - 12)
stranded wire with and without ferrules
Stripping length: 7 mm
**Wire fixing:** Captive slotted screw / M2.5
**Plug-in cage clamp terminals**
Cross section: 0.2 ... 2.5 mm² (AWG 24 - 12) solid or
0.25 ... 2.5 mm² (AWG 24 - 12)
stranded wire with and without ferrules
Stripping length: 10 mm
**Wire fixing:** Cage clamp terminal
**Fixing torque:** 0.5 Nm EN 60 999-1
**Mounting:** DIN-rail IEC/EN 60 715
**Weight**:
RK 7813: 60 g
RK 7814: 65 g
RK 7815: 60 g
RK 7816: 60 g

## Dimensions

**Width x height x depth**:
RK 781_: 17.5 x 90 x 66 mm
RK 781_ PC: 17.5 x 121 x 66 mm
RK 781_ PS: 17.5 x 107 x 66 mm

## UL-Data

**Switching capacity:**
Ambient temperature 60°C: Pilot duty B300
4A 240Vac G.P.
4A 30Vdc G.P.

**Wire connection:** 60°C / 75°C copper conductors only
AWG 22 - 14 Sol/Str Torque 0.5 Nm

**Technical data that is not stated in the UL-Data, can be found in the technical data section.**

## Standard Types

RK 7813.81/61 AC 230 V + AC/DC 24 V 1 ... 10 s
Article number: 0061585
- Time relay, operate delayed
- Output: 1 changeover contact
- Nominal voltage $U_N$: AC 230 V + AC/DC 24 V
- Width: 17.5 mm

RK 7814.81/61 AC 230 V + AC/DC 24 V 120 s
Article number: 0061169
- Time relay, operate delayed
- Output: 1 changeover contact
- Nominal voltage $U_N$: AC 230 V + AC/DC 24 V
- Width: 17.5 mm

RK 7815.71/61 AC 230 V + AC/DC 24 V 1 ... 10 s
Article number: 0061587
- Fleeting action relay
- Output: 1 changeover contact
- Nominal voltage $U_N$: AC 230 V + AC/DC 24 V
- Width: 17.5 mm

RK 7816.81/61 AC 230 V + AC/DC 24 V 1 ... 10 s
Article number: 0061593
- Flasher relay
- Output: 1 changeover contact
- Nominal voltage $U_N$: AC 230 V + AC/DC 24 V
- Width: 17.5 mm

## Variant

RK 7813.81/61, RK 7814.81/61,
RK 7815.71/61, RK 7816.81/61
RK 7817.81/61: with UL-approval

RK 7816.81/010/61: same as RK 7816._ _ / _ _ _
but start with break

**Ordering example for variant**

RK 781_ .81 _ _ /010 /61 AC 230 V + AC/DC 24 V 120 s

- Set time delay
- Nominal voltage
- with UL-approval (1 changeover contact)
- Variant
- Type of terminals
  - without indication: terminal blocks fixed, with screw terminals
  - PC (plug in cage clamp): pluggable terminal blocks with cage clamp terminals
  - PS (plug in screw): pluggable terminal blocks with screw terminals
- Contact
- Type

## Options with Pluggable Terminal Blocks

Screw terminal
(PS/plugin screw)

Cage clamp terminal
(PC/plugin cage clamp)

# MINITIMER
# Flasher Relay
# BC 7932N

0221546

- According to IEC/EN 61 812-1
- Adjustable flashing frequency, pulse times to 100 s
- Start with pulse
- Repeat accuracy ≤ 0.5 % + 10 ms
- 2-voltage design
- LED indicator for contact position
- 1 changeover contact
- Wire connection: also 2 x 1.5 mm² stranded ferruledb (isolated), DIN 46 228-1/-2/-3/-4 or 2 x 2.5 mm² stranded ferruled DIN 46 228-1/-2/-3
- Width 22.5 mm

## Function Diagram

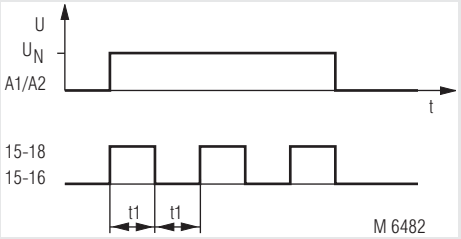


## Approvals and Markings

CE

## Indicators

| | |
|---|---|
| LED: | on when output relay activated (contacts 15-18 are closed) |

## Circuit Diagram

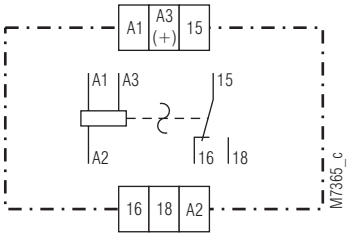


## Connection Terminals

| Terminal designation | Signal description |
|---|---|
| A1, A3(+), A2 | Operating voltage |
| 15, 16, 18 | Changeover contact |

## Technical Data

### Time Circuit

| | | |
|---|---|---|
| **Time ranges:** | 0.05 ... 1 s | (pulse or space) |
| | 0.5 ... 10 s | |
| | 5 ... 100 s | |
| **Time setting:** | stepless 1:20 | |
| **Recovery time:** | ≤ 100 ms | |
| **Repeat accuracy:** | ≤ 0.5 % + 10 ms | |
| **Voltage influence:** | ≤ 1 % | |
| **Temperature influence:** | < 0.25 % / K | |

### Input

| | | |
|---|---|---|
| **Nominal voltage $U_N$** | | |
| (Operating voltage): | AC/DC 24 V[1)] + AC 230 V[2)] | |
| | AC/DC 24 V[1)] + AC 110 ... 127 V[2)] | |
| | AC/DC 24 V[1)] + AC 42 V[2)] | |
| | [1)] at terminals A3-A2 | |
| | [2)] at terminals A1-A2 | |
| **Voltage range:** | AC 0.8 ... 1.1 $U_N$ | |
| | DC 0.9 ... 1.25 $U_N$ | |
| **Nominal consumption:** | AC: 4 VA | |
| | DC: 0.4 W | |
| **Nominal frequency:** | 50 / 60 Hz | |
| **Frequency range:** | ± 5 % $f_N$ | |
| **Release voltage:** | 15 % $U_N$ | |

### Output

| | | |
|---|---|---|
| **Contacts:** | 1 changeover contact | |
| **Contact material:** | AgNi | |
| **Measured nominal voltage:** | AC 250 V | |
| **Thermal current $I_{th}$:** | 4 A | |
| **Switching capacity** | | |
| to AC 15 | | |
| NO contact: | 3 A / AC 230 V | IEC/EN 60 947-5-1 |
| NC contact: | 1 A / AC 230 V | IEC/EN 60 947-5-1 |
| **Electrical life** | | IEC/EN 60 947-5-1 |
| to AC 15 at 1 A, AC 230 V: | 1.5 x $10^5$ switching cycles | |
| **Permissible switching frequency:** | 36 000 switching cycles / h | |
| **Short circuit strength max. fuse rating:** | 4 A gG / gL | IEC/EN 60 947-5-1 |
| **Mechanical life:** | $10^8$ switching cycles | |

### General Data

| | | |
|---|---|---|
| **Operating mode:** | Continuous operation | |
| **Temperature range** | | |
| Operation: | - 20 ... + 60 °C | |
| Storage: | - 25 ... + 70 °C | |
| **Relative air humidity:** | 95 % at 40 °C | |
| **Altitude:** | < 2.000 m | |
| **Clearance and creepage distances** | | |
| overvoltge category / pollution degree: | 4 kV / 2 (basis insulation) | IEC 60 664-1 |
| Overvoltage category: | III | |
| Insulation test voltage, type test: | 2.5 kV; 1 min | |
| **EMC** | | |
| Electrostatic discharge: | 6 kV (contact) | IEC/EN 61 000-4-2 |
| | 8 kV (air) | IEC/EN 61 000-4-2 |
| HF irradiation 80 MHz ... 2.7 GHz: | 20 V / m | IEC/EN 61 000-4-3 |
| Fast transients: | 4 kV | IEC/EN 61 000-4-4 |
| Surge voltages | | |
| between A1/A2: | 2 kV | IEC/EN 61 000-4-5 |
| between A3(+)/A2: | 0,5 kV | IEC/EN 61 000-4-5 |
| between A1, A2/PE: | 4 kV | IEC/EN 61 000-4-5 |
| HF-wire guided: | 20 V | IEC/EN 61 000-4-6 |
| Interference suppression: | Limit value class B | EN 55 011 |

## Technical Data

| | | |
|---|---|---|
| **Degree of protection** | | |
| Housing: | IP 40 | IEC/EN 60 529 |
| Terminals: | IP 20 | IEC/EN 60 529 |
| **Housing:** | Thermoplastic with V0 behaviour according to UL subject 94 | |
| **Vibration resistance:** | Amplitude 0.35 mm frequency 10 ... 55 Hz | IEC/EN 60 068-2-6 |
| **Climate resistance:** | 20 / 060 / 04 | IEC/EN 60 068-1 |
| **Terminal designation:** | EN 50 005 | |
| **Wire connection:** | | |
| Cross section: | 1 x 4 mm² solid or<br>1 x 2.5 mm² stranded ferruled (isolated) or<br>2 x 1.5 mm² stranded ferruled (isolated) DIN 46 228-1/-2/-3/-4 or<br>2 x 2.5 mm² stranded ferruled DIN 46 228-1/-2/-3 | |
| Insulation of wires or sleeve length: | 10 mm | |
| **Wire fixing:** | Terminal screws M 3.5<br>Box terminal with wire protection | |
| **Fixing torque:** | 0.8 Nm | |
| **Mounting:** | DIN rail | IEC/EN 60 715 |
| **Weight:** | 80 g | |

### Dimensions

| | |
|---|---|
| **Width x height x depth:** | 22.5 x 84 x 97 mm |

## Standard Type

BC 7932N.81 AC/DC 24 V + AC 230 V 50/60 Hz 0.5 ... 10 s

| | |
|---|---|
| Article number: | 0052669 |
| • Front colour grey, with box terminals | |
| • Output: | 1 changeover contact |
| • Nominal voltage $U_N$: | AC/DC 24 V + AC 230 V |
| • Time range: | 0.5 ... 10 s |
| • Width: | 22.5 mm |

## Variant

| | |
|---|---|
| BC 7932N/100: | Start with space |

### Ordering example for variant

BC 7932N .81 /_ _ _ AC/DC 24 V + AC 230 V 50 / 60 Hz 10 s

- Time ranges
- Nominal frequency
- Nominal voltage
- Variant, if required
- Contacts
- Type

# MINITIMER
# Flasher Relay
# MK 7851

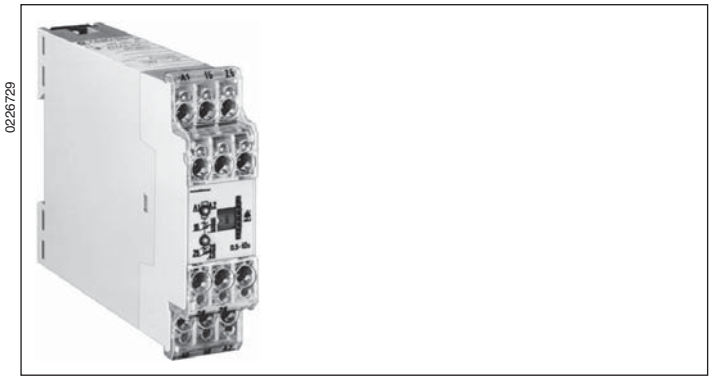


- According to IEC/EN 61 812-1
- Adjustable flashing frequency, impulse time up to 300 s
- Repeat accuracy < ± 0.5 %
- Adjustable on absolute scale
- Start with impulse
- Available start with space
- dual-voltage version
- LED indication for operation and contact position
- 2 changeover contacts
- Width 22.5 mm

## Function Diagram

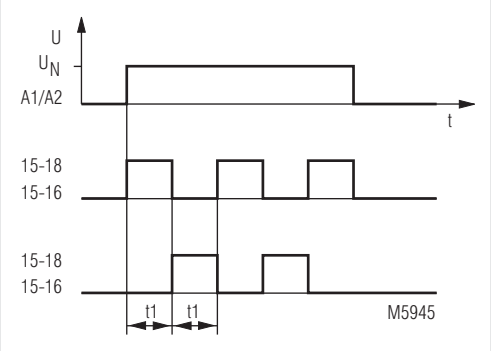


## Circuit Diagram

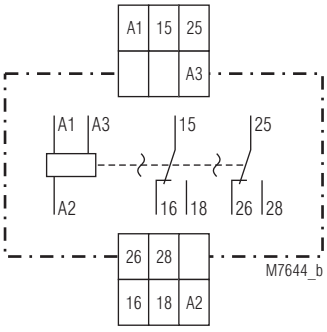


MK 7851.82/024

## Approvals and Markings

CE

## Indicators

| | |
|---|---|
| upper LED: | on, when supply connected |
| lower LED: | on, when output relay active (contact 15-18 closed) |

## Technical Data

### Time circuit

| | |
|---|---|
| **Time ranges:** | 0.05 ... 1 s = 600...30 Impulses/min |
| | 0.15 ... 3 s |
| | 0.5 ... 10 s |
| | 1.5 ... 30 s |
| | 3 ... 60 s |
| | 5 ... 100 s |
| | 15 ... 300 s |
| **Pulse duty factor:** | 1:1 |
| **Time setting:** | steppless on absolute scale |
| **Recovery time** | |
| tw 50 / 100: | < 40 ms |
| **Repeat accuracy:** | < ± 0.5 % of the max. scale value |
| **Voltage influence:** | ≤ 1 % |
| **Temperature influence:** | < 0.1 % / K |

### Input

| | | | |
|---|---|---|---|
| **Nominal voltage $U_N$:** | AC/DC 24 V[1)] + AC 110 ... 127 V[2)] | | |
| | AC/DC 24 V[1)] + AC 230 ... 240 V[2)] | | |
| | [1)] at terminals A3 - A2 | | |
| | [2)] at terminals A1 - A2 | | |
| | also available as | | |
| | single voltage version: | | |
| | AC/DC 12 V, AC/DC 42 ... 48 V | | |
| **Voltage range:** | AC 0.8 ... 1.1 $U_N$ | | |
| | DC 0.9 ... 1.25 $U_N$ | | |
| **Release voltage:** | 15 % $U_N$ | | |
| **Permissible residual current:** | 5 mA | | |
| **Nominal consumption:** | AC 230 V | DC 24 V | DC 42 V |
| | 8.5 VA | 1 W | 1 W |
| **Nominal frequency:** | 50 / 60 Hz | | |
| **Frequency range:** | ± 5 % $f_N$ | | |

## Technical Data

### Output

| | | |
|---|---|---|
| **Contacts:** | 2 changeover contacts | |
| **Release time:** | approx. 30 ms | |
| **Thermal current $I_{th}$:** | 5 A | |
| **Switching capacity** | | |
| to AC 15: | | |
| NO contact: | 3 A / AC 230 V | IEC/EN 60 947-5-1 |
| NC contact: | 2 A / AC 230 V | IEC/EN 60 947-5-1 |
| **Electrical life** | | IEC/EN 60 947-5-1 |
| to AC 15 at 3 A, AC 230 V: | 5 x $10^5$ switching cycles | |
| **Permissible siwtching frequency:** | 6 000 switching cycles / h | |
| **Short circuit strength max. fuse rating:** | 4 A gL | |
| **Mechanical life:** | > 30 x $10^6$ switching cycles | |

### General Data

| | | |
|---|---|---|
| **Operating mode:** | Continuous operation | |
| **Temperature range:** | - 20 ... + 60°C | |
| **Clearance and creepage distances** | | |
| rated impulse voltage/ pollution degree: | 4 kV / 2 | IEC 60 664-1 |
| **EMC** | | |
| Electrostatic discharge: | 8 kV (air) | IEC/EN 61 000-4-2 |
| HF irradiation: | 10 V/m | IEC/EN 61 000-4-3 |
| Fast transients: | 2 kV | IEC/EN 61 000-4-4 |
| Surge voltages between | | |
| wires for power supply: | 1 kV | IEC/EN 61 000-4-5 |
| between wire and ground: | 2 kV | IEC/EN 61 000-4-5 |
| HF-wire guided: | 10 V | IEC/EN 61 000-4-6 |
| Interference suppression: | Limit value class B | EN 55 011 |
| **Degree of protection** | | |
| Housing: | IP 40 | IEC/EN 60 529 |
| Terminals: | IP 20 | IEC/EN 60 529 |
| **Housing:** | Thermoplastic with V0 behaviour according to UL subject 94 | |
| **Vibration resistance:** | Amplitude 0.35 mm frequency 10 ... 55 Hz | IEC/EN 60 068-2-6 |
| **Climate resistance:** | 20 / 060 / 04 | IEC/EN 60 068-1 |
| **Terminal designation:** | EN 50 005 | |
| **Wire connection:** | 2 x 1.5 $mm^2$ solid or 2 x 1.0 $mm^2$ stranded wire with sleeve DIN 46 228-1/-2/-3/-4 | |
| **Wire fixing:** | Flat terminals with self-lifting clamping piece | IEC/EN 60 999-1 |
| **Mounting:** | DIN rail | IEC/EN 60 715 |
| **Weight:** | 150 g | |

### Dimensions

| | |
|---|---|
| **Width x height x depth:** | 22.5 x 82 x 99 mm |

## Standard Type

MK 7851 AC/DC24V + AC220...240V 50/60Hz 0.5 ... 10 s

| | | |
|---|---|---|
| Article number: | 0044846 | stock item |
| • Output: | 2 changeover contacts | |
| • Nominal voltage $U_N$: | AC/DC 24 V + AC 220 ... 240 V | |
| • Time range: | 0.5 ... 10 s | |
| • Width: | 22.5 mm | |

## Variant

MK 7851/1 _ _ : start with space

### Ordering example for variants

MK 7851 /_ _ _ AC/DC24V + AC230... 240V 50/60 Hz 15 ... 300 s

- Time range
- Nominal frequency
- Nominal voltage
- Variant, if required
- Type

## Accessories

ET 4752-143: Marking plate
Article number: 0043203

# MINITIMER
# Flasher Relay
# MK 7852

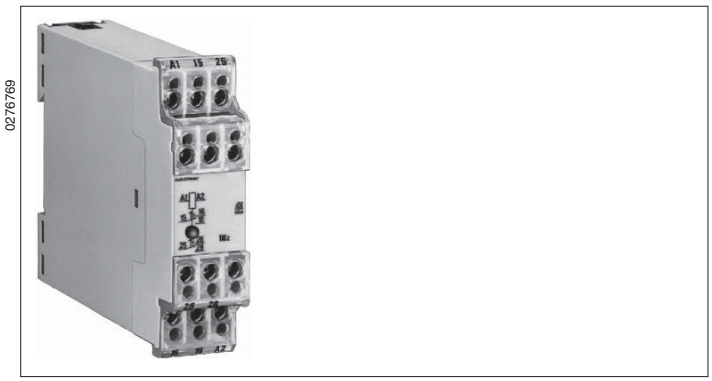


- According to IEC/EN 61 812-1
- Pulse time 0.5 s fixed
- Start with pulse
- Repeat accuracy < 1 %
- LED display for contact position
- Changeover contact 1 or 2 changeover contact
- Width: 22.5 mm

## Function Diagram

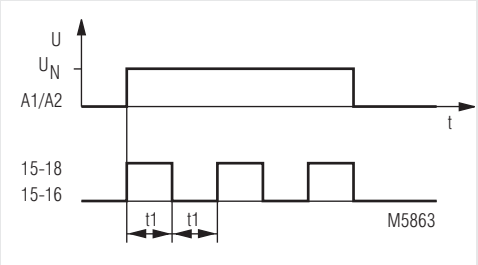


## Circuit Diagram

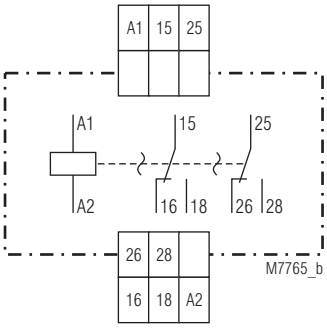


MK 7852.82

## Approvals and Marking

CE

## Application

Time-based control equipment

## Indicator

| | |
|---|---|
| LED: | on when the output relay is activated |

## Technical Data

### Time circuit

| | |
|---|---|
| **Pulse and space times:** | 0.5 s / 0.5 s ± 20 % start with flashing-on |
| **Time setting:** | fixed |
| **Repeat accuracy:** | < 1 % |
| **Voltage influence:** | < ± 1 % |
| **Temperature influence:** | < ± 0.05 % / K |

### Input

| | | |
|---|---|---|
| **Nominal voltage $U_N$:** | AC/DC 24, 42 V | |
| | AC 110 ... 127, 220 ... 240 V | |
| **Voltage range:** | 0.8 ... 1.1 $U_N$ | |
| **Nominal consumption:** | AC/DC 24, 42 V | 0.8 VA / 0.8 W |
| | AC 110 V | 2.2 VA |
| | AC 127 V | 2.9 VA |
| | AC 230 V | 4 VA |
| | AC 240 | 5 VA |
| **Nominal frequency:** | 50 / 60 Hz | |

### Output

| | | |
|---|---|---|
| **Contacts** | | |
| MK 7852.81: | 1 changeover contacts | |
| MK 7852.82: | 2 changeover contacts | |
| **Thermal current $I_{th}$:** | 5 A | |
| **Switching capacity** | | |
| to AC 15: | | |
| NO contact: | 3 A / AC 230 V | IEC/EN 60 947-5-1 |
| NC contact: | 1 A / AC 230 V | IEC/EN 60 947-5-1 |
| **Electrical life** | | |
| to AC 15 at 3 A, AC 230 V: | 5 x $10^5$ switch. cycl. | IEC/EN 60 947-5-1 |
| **Permissible operating frequency:** | depends on the flasher frequency | |
| **Short circuit strength max. fuse ratinge:** | 6 A gL | IEC/EN 60 947-5-1 |
| **Mechanical life:** | > 30 x $10^6$ switching cycles | |

## Technical Data

### General Data

| | | |
|---|---|---|
| **Operating mode:** | Continuous operation | |
| **Temperature range:** | - 20 ... + 60 °C | |
| **Clearance and creepage distances** | | |
| rated impulse voltage/ pollution degree: | 4 kV / 2 | IEC 60 664-1 |
| **EMC** | | |
| Electrostatic discharge: | 8 kV (air) | IEC/EN 61 000-4-2 |
| HF-irradiation: | 10 V/m | IEC/EN 61 000-4-3 |
| Fast transients: | 4 kV | IEC/EN 61 000-4-4 |
| Surge voltages between | | |
| wires for power supply: | 2 kV | IEC/EN 61 000-4-5 |
| between wire and ground: | 4 kV | IEC/EN 61 000-4-5 |
| HF-wire guided: | 10 V | IEC/EN 61 000-4-6 |
| Interference suppression: | Limit value class B | EN 55 011 |
| **Degree of protection** | | |
| Housing: | IP 40 | IEC/EN 60 529 |
| Terminals: | IP 20 | IEC/EN 60 529 |
| **Housing:** | Thermoplastic with V0 behaviour according to UL Subject 94 | |
| **Vibration resistance:** | Amplitude 0,35 mm, frequency 10 ... 55 Hz, | IEC/EN 60 068-2-6 |
| **Climate resistance:** | 20 / 060 / 04 | IEC/EN 60 068-1 |
| **Terminal designation:** | EN 50 005 | |
| **Wire connection:** | 2 x 1,5 mm² solid or 2 x 1,0 mm² stranded ferruled DIN 46 228-1/-2/-3/-4 | |
| **Wire fixing:** | Flat terminals with self-lifting clamping piece | IEC/EN 60 999-1 |
| **Mounting:** | DIN rail | IEC/EN 60 715 |
| **Weight:** | 130 g | |

### Dimensions

| | |
|---|---|
| **Width x height x depth:** | 22.5 x 82 x 99 mm |

## Standard Type

| | | |
|---|---|---|
| MK 7852.82 AC 220 ... 240 V | 50 / 60 Hz | |
| Article number: | 0023867 | stock item |
| • Output: | 2 changeover contacts | |
| • Nominal voltage $U_N$: | AC 220 ... 240 V | |
| • Width: | 22.5 mm | |

## Ordering Example

MK 7852 .81 AC 220 ... 240 V 50 / 60 Hz

- 50 / 60 Hz — Nominal frequency
- AC 220 ... 240 V — Nominal voltage
- .81 — Contacts
- MK 7852 — Type

## Accessories

| | |
|---|---|
| ET 4752-143: | Marking plate<br>Article number: 0043203 |

# MINITIMER
# Flasher Relay
# BA 7981

- According to IEC/EN 61 812-1
- Impulse time up to 3 s settable
- Repeat accuracy < ± 3 %
- Setting on absolute scale
- Start with impulse
- LED display for operation and contact position
- Available with 1 or 2 changeover contacts, as well as with semiconductor output
- Width 45 mm

## Function Diagrams

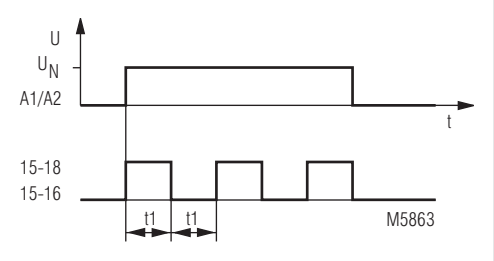


## Approvals and Markings

CE

## Application

Time dependent controls

## Circuit Diagrams

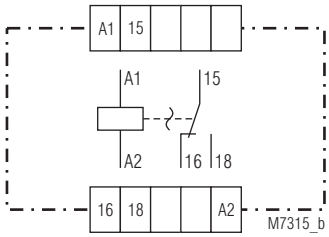


BA 7981.81

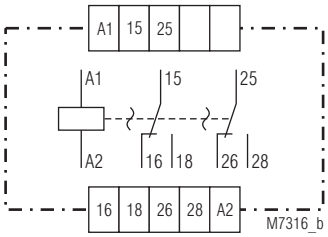


BA 7981.82

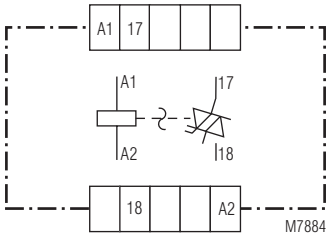


BA 7981.91

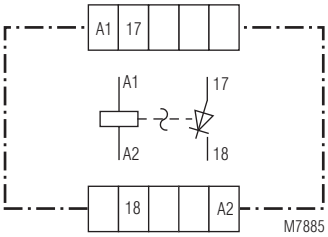


BA 7981.95

## Indication

| | |
|---|---|
| upper LED: | on when supply connected |
| lower LED: | on, when corresponding output relay is active |

## Notes

When DC-connection, pay attention to the corect polarity

## Technical Data

### Time circuit

| | |
|---|---|
| **Impulse time:** | 0.3 ... 3 s ≙ 100 ... 10 Imp./min. |
| **Pulse duty factor:** | 1 : 1 |
| **Time setting:** | infinite external setting |
| **Repeat accuracy:** | < ± 3 % |
| **voltage influence:** | < ± 1 % |
| **Temperature influence:** | < 0.4 % / K |

### Input

| | | | | | | | |
|---|---|---|---|---|---|---|---|
| **Nominal voltage $U_N$:** | AC 24, 42, 110, 127, 230, 240 V<br>DC 24 V residual ripple ≤ 48 %<br>with polarity protection | | | | | | |
| **Voltage range:** | 0.8 ... 1.1 $U_N$ | | | | | | |
| **Nominal consumption:** | AC | 24 | 42 | 110 | 127 | 230 | 240 V |
| without load | | 0.8 | 1.8 | 5 | 5 | 10 | 10 VA |
| | DC | 24 | V | | | | |
| | | 0.8 | W | | | | |
| **Nominal frequency:** | 50 / 60 Hz | | | | | | |

### Output

**Contacts**

| | | |
|---|---|---|
| BA 7981.81: | 1 changeover contact | |
| BA 7981.82: | 2 changeover contacts | |
| **Release time of the contacts:** | 50 ms | |
| **Thermal current $I_{th}$:** | 5 A | |
| **Switching capacity** | | |
| to AC 15 | | |
| NO contact: | 3 A / AC 230 V | IEC/EN 60 947-5-1 |
| NC contact: | 1 A / AC 230 V | IEC/EN 60 947-5-1 |
| **Electrical life** | | |
| to AC 15 at 1 A, AC 230 V: | ≥ 2,5 x $10^5$ Schaltsp. | IEC/EN 60 947-5-1 |
| **Permissible switching frequency:** | depends on the flasher frequency | |
| **Short circuit strength max. fuse rating:** | 6 A fast, 4 A slow | IEC/EN 60 947-5-1 |
| **Mechanical life:** | > 30 x $10^6$ switching cycles | |

### Semiconductor Outputs

| | |
|---|---|
| BA 7981.91: | Triac |
| Switching voltage: | AC 12 ... 275 V |
| Output current: | 4 A |
| BA 7981.95: | Transistor |
| Switching voltage: | DC 0 ... 30 V |
| Output current: | 5 A |

### General Data

| | | |
|---|---|---|
| **Operating mode:** | Continuous operation | |
| **Temperature range:** | 20 ... + 60 °C | |
| **Clearance and creepage distances** | | |
| overvoltage category / contamination level: | 4 kV / 2 | IEC 60 664-1 |
| **EMC** | | |
| Electrostatic discharge (ESD): | 8 kV (air) | IEC/EN 61 000-4-2 |
| HF irradiation: | 10 V/m | IEC/EN 61 000-4-3 |
| Fast transients: | 2 kV | IEC/EN 61 000-4-4 |
| Surge voltage between | | |
| wires for power supply: | 2 kV | IEC/EN 61 000-4-5 |
| between wire and ground: | 4 kV | IEC/EN 61 000-4-5 |
| Interference suppression: | Limit value class B | EN 55 011 |
| **Degree of protection:** | | |
| Housing: | IP 40 | IEC/EN 60 529 |
| Terminals: | IP 20 | IEC/EN 60 529 |
| **Housing:** | Thermoplast with V0 behaviour according to UL subject 94 | |
| **Vibration resistance:** | Amplitude 0,35 mm<br>Frequenz 10 ... 55 Hz, | IEC/EN 60 068-2-6 |
| **Climate resistance:** | 20 / 060 / 04 | IEC/EN 60 068-1 |
| **Terminal arrangement:** | DIN 46 199-5 | |
| **Terminal designation:** | EN 50 005 | |

## Technical Data

| | | |
|---|---|---|
| **Wire connection:** | 2 x 2,5 mm² solid or<br>2 x 1,5 mm² stranded wire with sleeve<br>DIN 46 228-1/-2/-3/-4 | |
| **Wire fixing:** | Flat terminals with self-lifting clamping piece | IEC/EN 60 999 |
| **Mounting:** | DIN rail | IEC/EN 60 715 |
| **Weight:** | 250 g | |
| **Dimensions** | | |
| **Width x height x depth**: | 45 x 73 x 133 mm | |

## Standard Type

BA 7981.81 AC 230 V 50/60 Hz 0,3 ... 3 s

| | | |
|---|---|---|
| Article number: | 0022425 | stock item |
| • Output: | 1 changeover contact | |
| • Nominal voltage $U_N$: | AC 230 V | |
| • Impulse time: | 0,3 ... 3 s | |
| • Width: | 45 mm | |

## Ordering Example

BA 7981 .95 5 A AC 230 V 50 / 60 Hz

- 50 / 60 Hz — Nominal frequency
- AC 230 V — Nominal voltage
- 5 A — Output current
- .95 — Contacts
- BA 7981 — Type

# MINITIMER
# Fleeting Action Relay
# IK 7815, SK 7815

0222113

- According to IEC/EN 61 812-1
- Fleeting time up to 60 min.
- Adjustable fleeting time
- Repeat accuracy ≤ ± 1 %
- LED indicator for contact position
- 1 changeover contact
- Devices available in 2 enclosure versions:
  IK 7815: depth 58 mm, with terminals at the bottom for installation systems and industrial distribution systems according to DIN 43 880
  SK 7815: depth 98 mm, with terminals at the top for cabinets with mounting plate and cable duct
- Width 17.5 mm

## Function Diagram

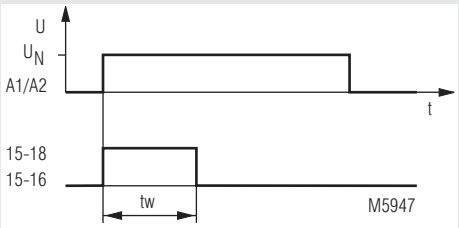


## Approvals and Markings

CE

## Application

Time-based control equipment

## Circuit Diagram

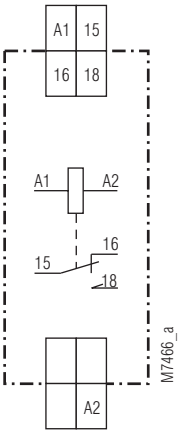


## Geräteanzeigen

| | |
|---|---|
| LED: | on when the output relay is activated (contact 15 - 18 is closed) |

## Notes

A change of the time setting is directly valid.
If a time is changed during time elaps, the output relay may energise unintended.

## Connection Terminals

| Terminal designation | Signal description |
|---|---|
| A1 | L / + |
| A2 | N / - |
| 15, 16, 18 | Changeover contact |

## Technical Data

**Time circuit**

| | | |
|---|---|---|
| **Fleeting time ranges:** | 0,1... 1 s | 1 ... 10 min |
| | 0,3 ... 3 s | 3 ... 30 min |
| | 1 ... 10 s | 6 ... 60 min |
| | 3 ... 30 s | |
| | 10 ... 100 s | |
| **Setting:** | Infinitely variable, on relative scale | |
| **Recovery time** | | |
| tw 50 / 100: | < 60 ms | |
| **Repeat accuracy:** | 0.1 % | |
| **Voltage influence:** | ≤ 1 % bei 0.8 ... 1.1 $U_N$ | |
| **Temperature influence:** | 0.05 % / K | |

**Input**

| | | |
|---|---|---|
| **Nominal voltage $U_N$:** | AC/DC 12 V, AC/DC 24 V, AC 110 ... 127 V, AC 220 ... 240 V | |
| **Voltage range:** | 0.8 ... 1.1 $U_N$ with AC and DC 48 % residual ripple<br>0.9 ... 1.25 $U_N$ in battery operating mode | |
| **Release voltage:** | 15 % $U_N$ | |
| **Nominal consumption:** | AC/DC 24 V | 0.6 W |
| | AC 230 V 50 Hz | 3.5 VA |
| **Nominal frequency:** | 50 / 60 Hz | |
| **Frequency range:** | ± 5 % | |

**Output**

| | | |
|---|---|---|
| **Contacts:** | 1 changeover contact | |
| **Contact material:** | $AgSnO_2$ | |
| **Measured nominal voltage:** | AC 250 V | |
| **Thermal current $I_{th}$:** | max. 10 A<br>(see quadratic total current limit curve) | |
| **Switching capacity** | | |
| to AC 15 | | |
| NO contact: | 10 A / AC 230V | IEC/EN 60 947-5-1 |
| NC contact: | 5 A / AC 230 V | IEC/EN 60 947-5-1 |
| **Glow lamp load:** | 1200 W | |
| **Electrical life:** | | IEC/EN 60 947-5-1 |
| AC 15 at 3 A, AC 230 V: | 5 x $10^5$ switching cycles | |
| **Permissible switching frequency:** | 6 000 switching cycles/h | |
| **Short circuit strength** | | |
| max. fuse rating: | 10 AgL | IEC/EN 60 947-5-1 |
| max. line circuit breaker: | B16 | |
| **Mechanical life:** | > 30 x $10^6$ switching cycles | |

**General Data**

| | | |
|---|---|---|
| **Operating mode:** | Continuous operation | |
| **Temperature range:** | | |
| Operation: | - 20 ... + 60°C | |
| Storage: | - 25 ... + 70°C | |
| **Relative air humidity:** | 95 % at 40 °C | |
| **Altitude:** | < 2.000 m | |
| **Clearance and creepage distances** | | |
| rated impulse voltage/ pollution degree: | 4 kV / 2 (base insulation) | IEC 60 664-1 |
| Overvoltage category: | III | |
| Insulation test voltage, type test: | 2.5 kV; 1 min | |
| **EMC** | | |
| Electrostatic discharge: | 8 kV (air) | IEC/EN 61 000-4-2 |
| HF irradiation | | |
| 80 MHz ... 1 GHz: | 10 V / m | IEC/EN 61 000-4-3 |
| 1 GHz ... 2.5 GHz: | 3 V / m | IEC/EN 61 000-4-3 |
| 2.5 GHz ... 2.7 GHz: | 1 V / m | IEC/EN 61 000-4-3 |
| Fast transients: | 4 kV | IEC/EN 61 000-4-4 |
| Surge voltages between | | |
| wires for power supply: | 2 kV | IEC/EN 61 000-4-5 |
| between wire and ground: | 4 kV | IEC/EN 61 000-4-5 |
| HF-wire guided: | 20 V | IEC/EN 61 000-4-6 |
| Interference suppression: | Limit value class B | EN 55 011 |
| **Degree of protection** | | |
| Housing: | IP 40 | IEC/EN 60 529 |
| Terminals: | IP 20 | IEC/EN 60 529 |

## Technical Data

| | | |
|---|---|---|
| **Housing:** | Thermoplastic with V0 behaviour according to UL Subj. 94 | |
| **Vibration resistance:** | Amplitude 0.35 mm frequency 10 ... 55 Hz, | IEC/EN 60 068-2-6 |
| **Climate resistance:** | 20 / 060 / 04 | IEC/EN 60 068-1 |
| **Terminal designation:** | EN 50 005 | |
| **Wire connection:** | | DIN 46 228-1/-2/-3/-4 |
| Cross section: | 2 x 2,5 $mm^2$ solid or<br>2 x 1,5 $mm^2$ stranded ferruled | |
| Stripping length: | 10 mm | |
| **Wire fixing:** | Flat terminals with self-lifting clamping piece | IEC/EN 60 999-1 |
| **Fixing torque:** | 0.8 Nm | IEC/EN 60 999-1 |
| **Mounting:** | DIN rail | IEC/EN 60 715 |
| **Weight** | | |
| IK 7815: | 75 g | |
| SK 7815: | 94 g | |

**Dimensions**

| | |
|---|---|
| **Width x height x depth** | |
| IK 7815: | 17.5 x 90 x 58 mm |
| SK 7815: | 17.5 x 90 x 98 mm |

## Standard Type

IK 7815.71 AC 220 ... 240 V 0.1 ... 1 s

| | |
|---|---|
| Article number: | 0031960 |
| • Output: | 1 changeover contact |
| • Nominal voltage $U_N$: | AC 220 ... 240 V |
| • Fleeting time: | 0.1 ... 1 s |
| • Width: | 17.5 mm |

SK 7815.71 AC 220 ... 240 V 0.1 ... 1 s

| | |
|---|---|
| Article number: | 0054740 |
| • Output | 1 changeover contact |
| • Nominal voltage $U_N$: | AC 220 ... 240 V |
| • Fleeting time: | 0.1 ... 1 s |
| • Witdth: | 17.5 mm |

## Variant

IK 7815 .71 AC 220 ... 240 V 0.1 ... 1 s

- 0.1 ... 1 s — Time range
- AC 220 ... 240 V — Nominal voltage
- .71 — Contacts
- IK 7815 — Type

## Characteristic

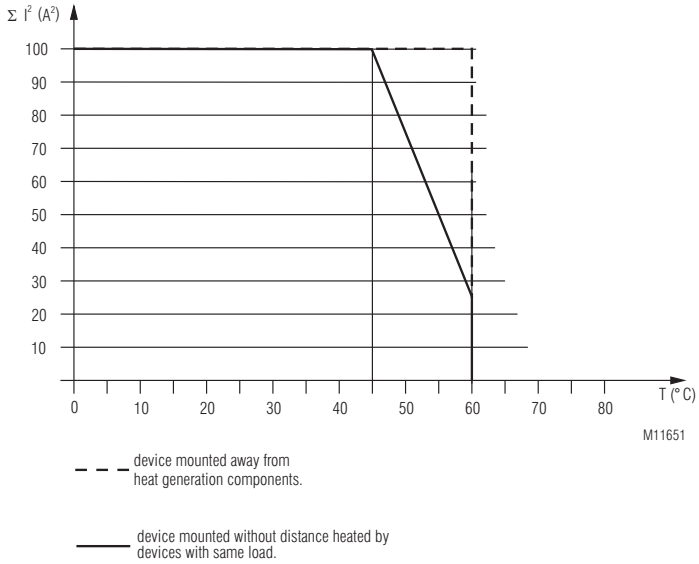


Quadratic total current limit curve

## Connection Example

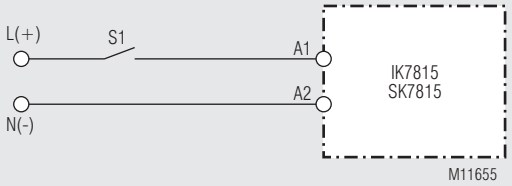

# MINITIMER
# Star-Delta Time Relay
# IK 7818

DOLD

0222116

- According to IEC/EN 61 812-1
- 1 NO contact fleeting on make, 1 NO contact operate delayed
- Delay up to 100 s
- Width 17.5 mm

## Function Diagram

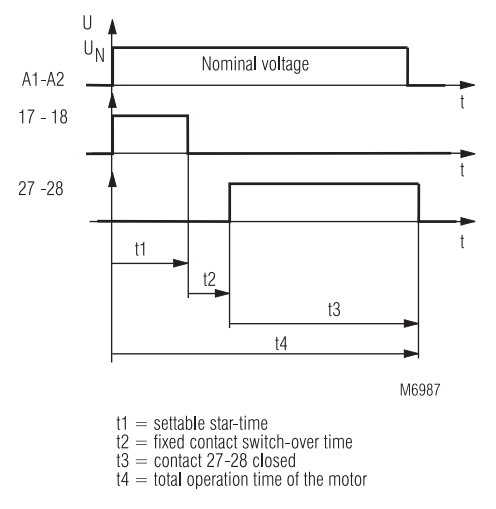


## Approvals and Markings

CE

## Application

Star-delta starting circuits for three-phase motors

## Function

IK 7818 is a static star-delta time relay with two separate output relays. Relay 1 is energized as soon as the operating voltage is available and returns to its home position when the set starting period is over. When the contact changeover time - that has to be indicated when an order is placed - has expired, the second relay is actuated and remains switched on as long as the star-delta time relay is provided with voltage.

## Circuit Diagram

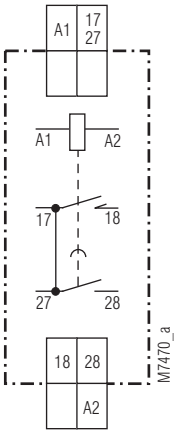


## Technical Data

### Time circuit

| | |
|---|---|
| **Time ranges:** | 0.5 ... 10 s  1.5 ... 30 s<br>3.0 ... 60 s  5.0 ... 100 s |
| **Time setting:** | Infinitely variable, on relative scale |
| **Contact changeover time:** | approx. 100 ms  Depending on order<br>approx. 35 ms  See ordering |
| **Recovery time:** | |
| tw 50 / 100: | < 40 ms |
| **Repeat accuracy:** | ≤ 0.5 % |
| **Voltage influence:** | ≤ 1 % bei 0.8 ... 1.1 $U_N$ |
| **Temperature influence:** | 0.1 % / K |

### Input

| | |
|---|---|
| **Nominal voltage $U_N$:** | AC 110 ... 127, 220 ... 240 V<br>AC/DC 24 V |
| **Voltage range:** | AC 0.8 ... 1.1 $U_N$<br>DC 0.9 ... 1.25 $U_N$ |
| **Nominal consumption:** | |
| AC 230 V: | 4 VA |
| AC/DC 24 V: | 0.2 W |
| **Nominal frequency:** | 50 / 60 Hz |
| **Frequency range:** | ± 5 % |

### Output

| | |
|---|---|
| **Contacts** | |
| IK 7818.38: | 1 NO contact / fleeting on make<br>1 NO contact / operate delayed |
| **Release time of the contacts:** | About 40 ms |
| **Nominal output voltage:** | AC 250 V |
| **Thermal current $I_{th}$:** | 3 A at $t_u$ = 45°C |

## Technical Data

| | | |
|---|---|---|
| **Switching capacity** | | |
| to AC 15 | | |
| NO contact: | 3 A / AC 230 V | IEC/EN 60 947-5-1 |
| NC contact: | 1 A / AC 230 V | IEC/EN 60 947-5-1 |
| **Electrical life** | | IEC/EN 60 947-5-1 |
| to AC 15 at 3 A, AC 230 V: | 5 x $10^5$ switching cycles (see characteristics) | |
| **Permissible switching frequency:** | 6 000 switching cycles/h | |
| **Short circuit strength max. fuse rating:** | 4 AgL | IEC/EN 60 947-5-1 |
| **Mechanical life:** | 100 x $10^6$ switching cycles | |

### General Data

| | | |
|---|---|---|
| **Operating mode:** | Continuous operation | |
| **Temperature range:** | - 20 ... + 60°C | |
| **Clearance and creepage distances** | | |
| Rated impulse voltage/ pollution degree: | 4 kV / 2 | IEC 60 664-1 |
| **EMC** | | |
| Electrostatic discharge: | 6 kV (contact) | IEC/EN 61 000-4-2 |
| HF irradiation: | 10 V/m | IEC/EN 61 000-4-3 |
| Fast transients: | 2 kV | IEC/EN 61 000-4-4 |
| Surge voltages between wires for power supply: | 2 kV | IEC/EN 61 000-4-5 |
| between wire and ground: | 4 kV | IEC/EN 61 000-4-5 |
| Interference suppression: | Limit value class B | EN 55 011 |
| **Degree of protection** | | |
| Housing: | IP 40 | IEC/EN 60 529 |
| Terminals: | IP 20 | IEC/EN 60 529 |
| **Housing:** | Thermoplastic with V0 behaviour according to UL Subj. 94 | |
| **Vibration resistance:** | Amplitude 0.35 mm frequency 10 ... 55 Hz | IEC/EN 60 068-2-6 |
| **Climate resistance:** | 20 / 060 / 04 | IEC/EN 60 068-1 |
| **Terminal designation:** | EN 50 005 | |
| **Wire connection:** | 2 x 2.5 $mm^2$ solid or 2 x 1.5 $mm^2$ stranded ferruled DIN 46 228-1/-2/-3/-4 | |
| **Wire fixing:** | Flat terminals with self-lifting clamping piece | IEC/EN 60 999-1 |
| **Mounting:** | DIN rail | IEC/EN 60 715 |
| **Weight:** | 75 g | |

### Dimensions

| | |
|---|---|
| **Width x height x depth:** | 17.5 x 90 x 58 mm |

## Standard Type

IK 7818.38 AC 220 ... 240 V 10 s / 100 ms

| | |
|---|---|
| Article number: | 0040962 |
| • Nominal voltage $U_N$: | AC 220 ... 240 V |
| • Delay: | 0.5 ... 10 s |
| • Contact changeover time: | 100 ms |
| • Width: | 17.5 mm |

## Ordering Example

IK 7818 .38 AC 220 ... 240 V 50 / 60 Hz 30 s / 35 ms

- 30 s / 35 ms — Time range max. value/ changeover time
- 50 / 60 Hz — Nominal frequency
- AC 220 ... 240 V — Nominal voltage
- .38 — Contacts
- IK 7818 — Type

## Characteristics

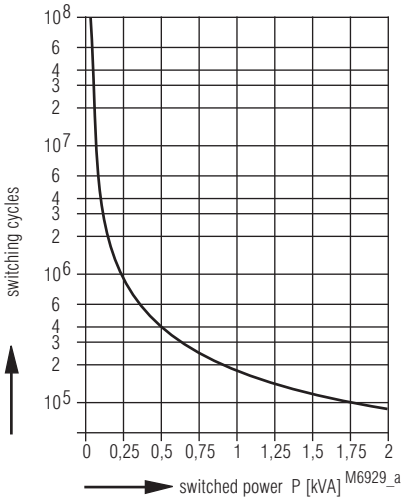


Electrical life

## Connection Example

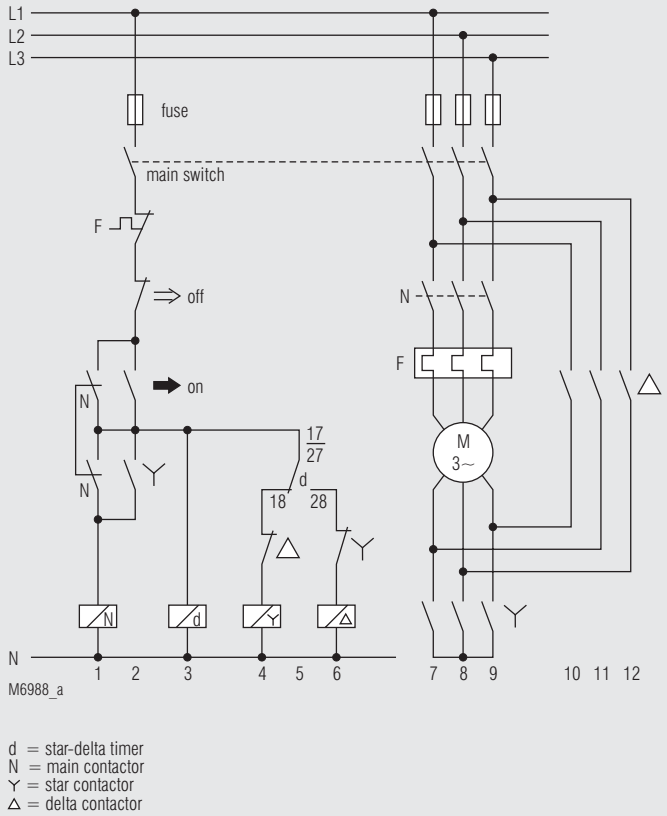


Example of the control circuit of a star-delta starting unit with the electronic time relay IK 7818:
The star-delta time relay is energized by pressing the „On“ pushbutton and the contact d moves to position 17 / 27 · 18. The star contactor Y is activated. The mains supply contactor N is switched on via the contact Y in the current path 2 and locks via the contacts N in the current path 1. The motor M starts in the Y circuit during the delay set on the time relay d. When the delay is over, the contact 17 / 27 · 18 opens and the Y contactor is released. After about 35 ms or 100 ms (depending on the unit), the contact d 17 / 27 · 28 closes and the Δ–contactor is activated. The motor M continues to run in the Δ–circuit until the mains supply contactor N is de-energized by pressing the „Off“ pushbutton.

The whole of the starting procedure commences again from the beginning after the system has been switched off and after every interruption in the starting operation.
The purpose of the NC contact Y in the current path 6 and Δ in the current path 4 is to make sure that the Y and Δ contactor are not connected through at the same time if the Y or Δ contactor happens to „stick“.

# MINITIMER
## Fleeting Action Relay, Fleeting On Brake
## IK 7820, SK 7820

0276768

- According to IEC/EN 61 812-1
- With 4 time ranges from 0.25 ... 640 s
- Adjustable
- With auxiliary voltage
- For wide voltage range AC 50/60 Hz 110 ... 240 V
- Control input operated with nominal voltage; no voltage free contact necessary
- LED indicator for status of contact
- 1 changeover contact
- Devices available in 2 enclosure versions:
  IK 7820: depth 59 mm, with terminals at the bottom for installation systems and industrial distribution systems according to DIN 43 880
  SK 7820: depth 98 mm, with terminals at the top for cabinets with mounting plate and cable duct
- Width: 17.5 mm

### Function Diagram

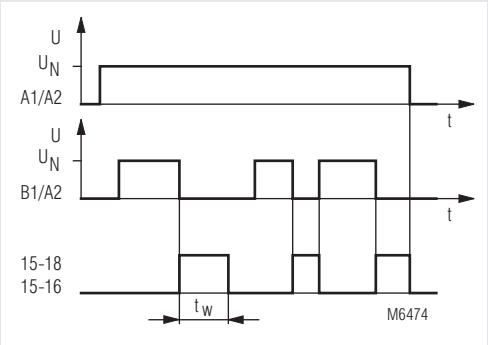


### Circuit Diagram

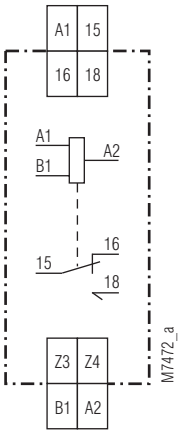


IK 7820.73, SK 7820.73

### Approvals and Marking

CE

### Applications

Time-dependent controllers

### Indicators

| | |
|---|---|
| LED: | on, when output relay activated (contact 15 - 18 closed) |

### Notes

The control input B1 relative to A2 has the same voltage range as A1-A2. In a 3-phase system B1 can also be connected to a different phase then A1 if the neutral is connected to A2. As the control input is operated with voltage, the control contact can also switch additional loads, e.g. contactors with the same A2 reference. This allows to use less contacts (see connection Diagram).

### Technical Data

**Time circuit**

| | | |
|---|---|---|
| **Time ranges:** | 4 different time ranges programmable via terminals: | |
| | time range | bridge |
| | 0.25 ... 2.5 s | Z4----- A2 |
| | 1 ... 10 s | Z3---------- A2 |
| | 8 ... 80 s | Z3---- Z4----- A2 |
| | 64 ... 640 s | (without) |
| **Tolerance of the max. scale value:** | - 5 ... + 25 % | |
| **Time setting:** | infinitely variable 1:10 on relative scale | |
| **Min. closing time** (Control input B1): | ≥ 20 ms | |
| **Repeat accuracy** (Control input B1): | ≤ 40 ms | |
| **Repeat accuracy:** | ≤ 0.5 % + 20 ms | |
| **Voltage influence:** | ≤ 1 % | |
| **Temperature influence:** | ≤ 0.25 % / K | |

## Technical Data

### Input

| | | |
|---|---|---|
| **Nominal voltage $U_N$:** | AC 110 ... 240 V, AC/DC 24 V | |
| **Voltage range:** | 0.8 ... 1.1 $U_N$ | |
| **Nominal consumption** | | |
| (A1-A2)**:** | AC 230 V: | approx. 8 VA |
| | AC 24 V: | approx. 1.5 VA |
| | DC 24 V: | approx. 0.7 W |
| **Nominal frequency:** | 50 / 60 Hz | |
| **Reset voltage:** | 15 % $U_N$ | |
| **Input current B1:** | approx. 0.3 mA | |

### Output

| | | |
|---|---|---|
| **Contacts:** | | |
| IK 7820.73, SK 7820.73: | 1 changeover contact (fleeting on brake) | |
| **Thermal current $I_{th}$:** | 10 A up to 45°C<br>(see continuous current limit curve) | |
| **Switching capacity** | | |
| to AC 15 | | |
| NO contact: | 10 A / AC 230 V | IEC/EN 60 947-5-1 |
| NC contact: | 5 A / AC 230 V | IEC/EN 60 947-5-1 |
| **Electrical life** | | |
| to AC 15 at 3 A, AC 230 V: | ≥ 5 x $10^5$ switch. cycl. | IEC/EN 60 947-5-1 |
| **Short circuit strength** | | |
| **max. fuse rating:** | 10 A gL | IEC/EN 60 947-5-1 |
| **Mechanical life:** | ≥ 30 x $10^6$ switching cycles | |

### General Data

| | | |
|---|---|---|
| **Operating mode:** | Continuous operation | |
| **Temperature range:** | - 20 ... + 60 °C | |
| **Clearance and creepage distances** | | |
| rated impuls voltage / pollution degree: | 4 kV / 2 | IEC 60 664-1 |
| **EMC** | | |
| Electrostatic discharge: | 6 kV (air) | IEC/EN 61 000-4-2 |
| HF-irradiation: | 10 V/m | IEC/EN 61 000-4-3 |
| Fast transients: | 4 kV | IEC/EN 61 000-4-4 |
| Surge voltages between wires for power supply: | 1 kV<br>(0.5 kV at AC/DC 24 V) | IEC/EN 61 000-4-5 |
| between wire and ground: | 2 kV | IEC/EN 61 000-4-5 |
| Interference suppression: | Limit value class B | EN 55 011 |
| **Degree of protection** | | |
| Housing: | IP 40 | IEC/EN 60 529 |
| Terminals: | IP 20 | IEC/EN 60 529 |
| **Housing:** | Thermoplastic wiht Vo behaviour according to UL subject 94 | |
| **Vibration resistance:** | Amplitude 0.35 mm frequency 10 ... 55 Hz, | IEC/EN 60 068-2-6 |
| **Climate resistance:** | 20 / 060 / 04 | IEC/EN 60 068-1 |
| **Terminal designation:** | EN 50 005 | |
| **Wire connection:** | 2 x 2.5 $mm^2$ solid or<br>2 x 1.5 $mm^2$ stranded wire with sleeve<br>DIN 46 228-1/-2/-3/-4 | |
| **Wire fixing:** | Flat terminals with self-lifting clamping piece | IEC/EN 60 999-1 |
| **Mounting:** | DIN rail | IEC/EN 60 715 |
| **Weight** | | |
| IK 7820: | 70 g | |
| SK 7820: | 89 g | |

### Dimensions

| | |
|---|---|
| **Width x heigth x depth** | |
| IK 7820: | 17.5 x 90 x 59 mm |
| SK 7820: | 17.5 x 90 x 98 mm |

## Standard Type

IK 7820.73 AC 110 ... 240 V 0,25 ... 640 s

| | |
|---|---|
| Article number: | 0047159 |
| • Nominal voltage $U_N$: | AC 110 ... 240 V |
| • Time range: | 0.25 ... 640 s adjustable |
| • Width: | 17.5 mm |

SK 7820.73 AC 110 ... 240 V 0,25 ... 640 s

| | |
|---|---|
| Article number: | 0054754 |
| • Nominal voltage $U_N$: | AC 110 ... 240 V |
| • Time range: | 0.25 ... 640 s adjustable |
| • Width: | 17.5 mm |

## Ordering Example

IK 7820 .73 AC 110 ... 240 V 50 / 60 Hz 0,25 ... 640 s

- Time range
- Nominal frequency
- Nominal voltage
- Contacts
- Type

## Characteristics

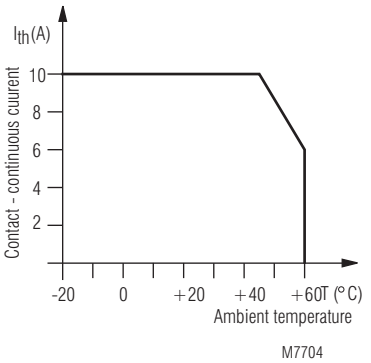


Continuous current limit curve

## Connection Example

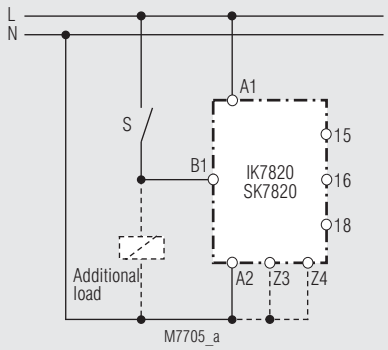


Remarks:
Z3, Z4... Programming of time range
S... Control contact for function
Contact S can also switch additional load connected inparallel to ow relay

# MINITIMER
## Fleeting Action Relay
## IK 7826

- According to IEC/EN 61 812-1
- Fleeting action 0.05 ... 1 s, adjustable
- Fleet make contact
- Repeat accuracy ≤ 0.5 % + 10 ms
- Pushbutton for manual actuation of the contact
- 1 changeover contact for 16 A
- Width 17.5 mm

### Function Diagram

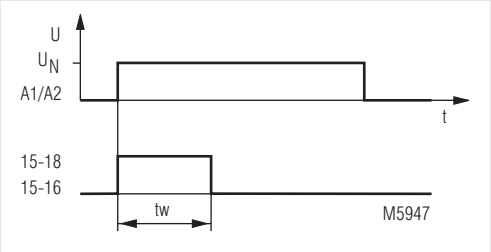


### Circuit Diagram

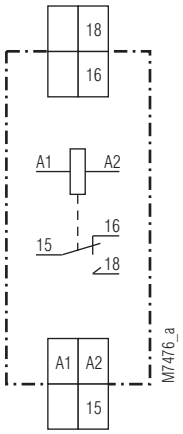


### Approvals and Markings

CE

### Applications

- Time-dependent controllers

### Indicators

| | |
|---|---|
| Push button: | pressed, when relay energized |

### Technical Data

| | |
|---|---|
| **Fleeting action:** | 0.05 ... 1 s |
| **Tolerance of end value:** | - 5 ... + 25 % of nominal value |
| **Time setting:** | stepless, 1:20 on relative scale |
| **Recovery time:** | approx. 60 ms (during time run-down)<br>approx. 700 ms (after time run-down) |
| **Repeat accuracy:** | < ± 0.5 % + 10 ms |

#### Input

| | |
|---|---|
| **Nominal voltage $U_N$:** | AC 24, 127, 230 V<br>DC 24 V |
| **Voltage range:** | 90 ... 110 % $U_N$ |
| **Nominal frequency:** | 50 Hz |
| **Frequency range:** | ± 5 % |
| **Nominal consumption** | |
| AC: | 2.3 VA |
| DC: | 1.5 W |
| **Voltage influence:** | < 1 % over voltage range |
| **Temperature influence:** | < 0.1 % / K |

#### Output

| | |
|---|---|
| **Contacts** | |
| IK 7826.71: | 1 changeover contact<br>(fleet make contact) |
| **Release time of the contacts:** | < 30 ms |
| **Thermal current $I_{th}$:** | 16 A |
| **Electrical life** | at 500 switching cycles / h |
| under ohmic load AC 230 V: | 6 A 150 x $10^4$ switching cycles |
| | 10 A 72 x $10^4$ switching cycles |
| | 16 A 12 x $10^4$ switching cycles |
| Inductive load cos φ 0.6: | 10 A 10 x $10^4$ switching cycles |
| **DC load:** | see limit curve for arc-free operation |
| **Short circuit strength** | |
| **max. fuse rating:** | 16 A gL IEC/EN 60 947-5-1 |
| **Mechanical life:** | > 3 x $10^6$ switching cycles |

## Technical Data

### General Data

| | | |
|---|---|---|
| **Operating mode:** | Continuous operation | |
| **Temperature range:** | - 20 ... + 45 °C | |
| **Clearance and creepage distances** | | |
| rated impulse voltage / pollution degree: | 4 kV / 2 | IEC 60 664-1 |
| **EMC** | | |
| Electrostatic discharge: | 8 kV (air) | IEC/EN 61 000-4-2 |
| HF irradiation: | 10 V / m | IEC/EN 61 000-4-3 |
| Fast transients: | 2 kV | IEC/EN 61 000-4-4 |
| Surge voltages between | | |
| wires for power supply: | 1 kV | IEC/EN 61 000-4-5 |
| between wire and ground: | 2 kV | IEC/EN 61 000-4-5 |
| Interference suppression: | Limit value class B | EN 55 011 |
| **Degree of protection** | | |
| Housing: | IP 40 | IEC/EN 60 529 |
| Terminals: | IP 20 | IEC/EN 60 529 |
| **Housing:** | Thermoplastic with V0 behaviour according to UL subject 94 | |
| **Vibration resistance:** | Amplitude 0.35 mm, frequency 10 ... 55 Hz | IEC/EN 60 068-2-6 |
| **Climate resistance:** | 20 / 045 / 04 | IEC/EN 60 068-1 |
| **Terminal designation:** | EN 50 005 | |
| **Wire connection:** | 2 x 2.5 mm² solid or 2 x 1.5 mm² stranded ferruled DIN 46 228-1/-2/-3/-4 | |
| **Wire fixing:** | Flat terminals with self-lifting clamping piece | IEC/EN 60 999-1 |
| **Mounting:** | DIN rail | IEC/EN 60 715 |
| **Weight:** | 100 g | |

### Dimensions

| | |
|---|---|
| **Width x height x depth:** | 17.5 x 89 x 58 mm |

## Standard Type

| | | | | |
|---|---|---|---|---|
| IK 7826.71 | AC 230 V | 50 Hz | 0.05 ... 1 s | |
| Article number: | | | 0043114 | stock item |
| • Output: | | | 1 changeover contact (fleet make contact) | |
| • Nominal voltage $U_N$: | | | AC 230 V | |
| • Fleeting action: | | | 0.05 ... 1 s | |
| • Width: | | | 17.5 mm | |

## Ordering Example

IK 7826 .71 AC 230 V 50 Hz 1 s

- 1 s — Time range limit value
- 50 Hz — Nominal frequency
- AC 230 V — Nominal voltage
- .71 — Contact
- IK 7826 — Type

## Characteristics

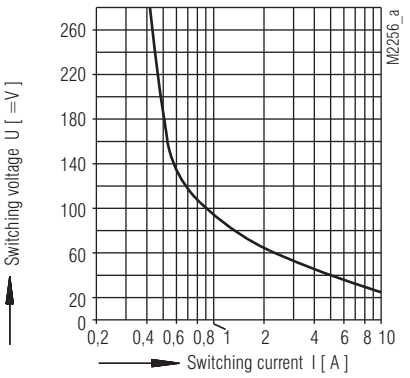


safe braking, no continuous arcing
max. 1000 switching cycles / h
contact spacing min. 0,6mm

Limit curve for arc-free operation

# MINITIMER
## Fleeting Action Relay
## BC 7931N

0221545

- According to IEC/EN 61 812-1
- Fleeting action
- Repeat time adjustable to 100 s
- Repeat accuracy ≤ 0.5 % + 10 ms
- Dual voltage supply
- LED indicator for contact position
- 1 changeover contact
- Wire connection: also 2 x 1.5 mm² stranded ferruled (isolated), DIN 46 228-1/-2/-3/-4 or 2 x 2.5 mm² stranded ferruled DIN 46 228-1/-2/-3
- Width 22.5 mm

### Function Diagram

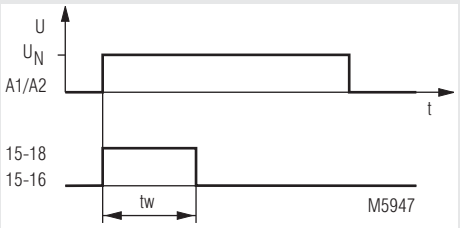


### Circuit Diagram

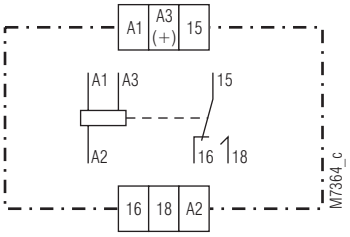


### Approvals and Markings

CE

### Applications

Time-dependent controllers

### Indicators

LED: on when output relay activated (contacts 15-18 are closed)

### Connection Terminals

| Terminal designation | Signal description |
|---|---|
| A1, A3(+), A2 | Operating voltage |
| 15, 16, 18 | Changeover contact |

## Technical Data

### Time Circuit

| | |
|---|---|
| **Time ranges:** | 0.05 ... 1 s<br>0.5 ... 10 s<br>5 ... 100 s |
| **Time setting:** | stepless 1:20 |
| **Recovery time:** | ≤ 100 ms |
| **Repeat accuracy:** | ≤ 0.5 % + 10 ms |
| **Voltage influence:** | < 1 % over voltage range |
| **Temperature influence:** | < 0.25 % / K |

### Input

| | |
|---|---|
| **Nominal voltage $U_N$** | |
| **(**Operating voltage): | AC/DC 24 V[1)] + AC 230 V[2)]<br>AC/DC 24 V[1)] + AC 110 ... 127 V[2)]<br>AC/DC 24 V[1)] + AC 42 V[2)]<br>[1)] at terminals A3-A2<br>[2)] at terminals A1-A2 |
| **Voltage range:** | AC 0.8 ... 1.1 $U_N$<br>DC 0.9 ... 1.25 $U_N$ |
| **Nominal consumption:** | AC: 4 VA<br>DC: 0.4 W |
| **Nominal frequency:** | 50 / 60 Hz |
| **Frequency range:** | ± 5 % $f_N$ |
| **Release voltage:** | 15 % $U_N$ |

### Output

| | | |
|---|---|---|
| **Contacts**: | 1 changeover contact | |
| **Contact material:** | AgNi | |
| **Measured nominal voltage:** | AC 250 V | |
| **Thermal current $I_{th}$:** | 4 A | |
| **Switching capacity** | | |
| to AC 15 | | |
| NO contact: | 3 A / AC 230 V | IEC/EN 60 947-5-1 |
| NC contact: | 1 A / AC 230 V | IEC/EN 60 947-5-1 |
| **Electrical life:** | | IEC/EN 60 947-5-1 |
| to AC 15 at 1 A, AC 230 V: | 1.5 x $10^5$ switching cycles | |
| **Permissible switching frequency:** | 36 000 switching cycles / h | |
| **Short circuit strength max. fuse rating:** | 4 A gG / gL | IEC/EN 60 947-5-1 |
| **Mechanical life:** | $10^8$ switching cycles | |

### General Data

| | | |
|---|---|---|
| **Operating mode:** | Continuous operation | |
| **Temperature range** | | |
| Operation: | - 20 ... + 60 °C | |
| Storage: | - 25 ... + 70 °C | |
| **Relative air humidity:** | 95 % at 40 °C | |
| **Altitude:** | < 2.000 m | |
| **Clearance and creepage distances** | | |
| overvoltge category / pollution degree: | 4 kV / 2 (basis insulation) | IEC 60 664-1 |
| Overvoltage category: | III | |
| Insulation test voltage, type test: | 2.5 kV; 1 min | |
| **EMC** | | |
| Electrostatic discharge: | 6 kV (contact) | IEC/EN 61 000-4-2 |
| | 8 kV (air) | IEC/EN 61 000-4-2 |
| HF irradiation: | | |
| 80 MHz ... 2.7 GHz: | 20 V/m | IEC/EN 61 000-4-3 |
| Fast transients: | 4 kV | IEC/EN 61 000-4-4 |
| Surge voltages | | |
| between A1/A2: | 2 kV | IEC/EN 61 000-4-5 |
| between A3(+)/A2: | 0,5 kV | IEC/EN 61 000-4-5 |
| between A1, A2/PE: | 4 kV | IEC/EN 61 000-4-5 |
| HF-wire guided: | 20 V | IEC/EN 61 000-4-6 |
| Interference suppression: | Limit value class B | EN 55 011 |

## Technical Data

| | | |
|---|---|---|
| **Degree of protection** | | |
| Housing: | IP 40 | IEC/EN 60 529 |
| Terminals: | IP 20 | IEC/EN 60 529 |
| **Housing:** | Thermoplastic with V0 behaviour according to UL subject 94 | |
| **Vibration resistance:** | Amplitude 0.35 mm<br>frequency 10 ... 55 Hz | IEC/EN 60 068-2-6 |
| **Climate resistance:** | 20 / 060 / 04 | IEC/EN 60 068-1 |
| **Terminal designation:** | EN 50 005 | |
| **Wire connection:** | | |
| Cross section: | 1 x 4 $mm^2$ solid or<br>1 x 2.5 $mm^2$ stranded ferruled (isolated)<br>or<br>2 x 1.5 $mm^2$ stranded ferruled (isolated)<br>DIN 46 228-1/-2/-3/-4 or<br>2 x 2.5 $mm^2$ stranded ferruled<br>DIN 46 228-1/-2/-3 | |
| Insulation of wires or sleeve length: | 10 mm | |
| **Wire fixing:** | Terminal screws M 3.5<br>Box terminal with wire protection | |
| **Fixing torque:** | 0.8 Nm | |
| **Mounting:** | DIN rail | IEC/EN 60 715 |
| **Weight:** | 80 g | |

### Dimensions

| | |
|---|---|
| **Width x height x depth:** | 22.5 x 84 x 97 mm |

## Standard Type

BC 7931N.71 AC/DC 24 V + AC 230 V 50/60 Hz 0.5 ... 10 s

| | |
|---|---|
| Article number: | 0052663 |

- Front colour grey, with box terminals
- Output: 1 changeover contact
- Nominal voltage $U_N$: AC/DC 24 V + AC 230 V
- Time range: 0.5 ... 10 s
- Width: 22.5 mm

## Ordering Example

BC 7931N .71 AC/DC 24 V + AC 230 V 50/60 Hz 1 s

- 1 s — Time range end value
- 50/60 Hz — Nominal frequency
- AC/DC 24 V + AC 230 V — Nominal voltage
- .71 — Contacts
- BC 7931N — Type

# MINITIMER
# Star-Delta-Timer
# BC 7936N

DOLD

0225500

- According to IEC/EN 61 812-1
- Time ranges up to 100 s
- Repeat accuracy ≤ 0.5 % + 10 ms
- 2-voltage design
- LED indicators for contact position
- 1 NO contact fleeting make
  1 NO contact operate delayed
- Wire connection: also 2 x 1.5 mm² stranded ferruled (isolated), DIN 46 228-1/-2/-3/-4 or
  2 x 2.5 mm² stranded ferruled DIN 46 228-1/-2/-3
- Width 22.5 mm

## Function Diagram

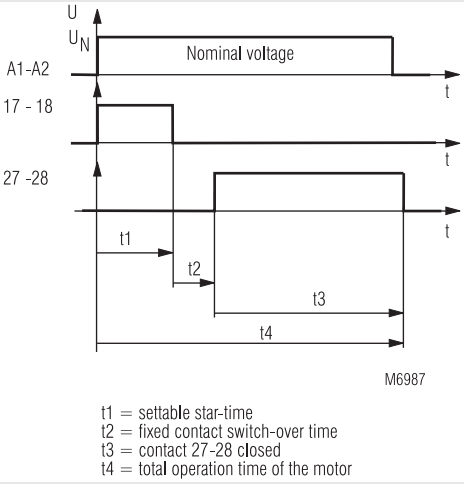


## Circuit Diagram

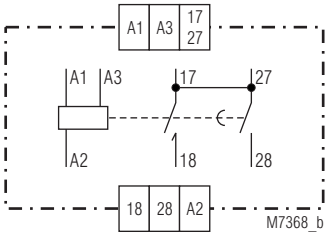


## Approvals and Markings

CE

## Applications

Star-Delta starting of 3-phase motors

## Indicators

| | |
|---|---|
| upper LED: | on, when output relay acitvated (contacts 17-18 are closed) |
| lower LED: | on, when output relay acitvated (contacts 27-28 are closed) |

## Technical Data

### Time Circuit

| | |
|---|---|
| **Time ranges:** | 0.5 ... 10 s  1.5 ... 30 s<br>3.0 ... 60 s  5.0 ... 100 s |
| **Time setting:** | infinitely variable 1 : 20 |
| **Contact switch-over time:** | 35 ms<br>80 ms<br>100 ms |
| **Recovery time:** | ≤ 100 ms |
| **Repeat accuracy:** | ≤ 0.5 % + 10 ms |
| **Voltage influence:** | ≤ 1 % |
| **Temperature influence:** | 0.25 % / K |

### Input

| | |
|---|---|
| **Nominal voltage $U_N$:** | AC/DC 24 V[1)] + AC/DC 42 ... 48 V[2)]<br>AC/DC 24 V[1)] + AC 110 ... 127 V[2)]<br>AC/DC 24 V[1)] + AC 220 ... 240 V[2)]<br>[1)] on terminals A3-A2<br>[2)] on terminals A1-A2 |
| **Voltage range:** | AC 0.8 ... 1.1 $U_N$<br>DC 0.9 ... 1.25 $U_N$ |
| **Nominal consumption:** | |
| AC 230 V: | 3.6 VA |
| DC 24 V: | 0.35 W |
| **Nominal frequency:** | 50 / 60 Hz |
| **Release voltage:** | ≥ 15 % $U_N$ |

### Output

| | | |
|---|---|---|
| **Contacts**: | 1 NO contact fleeting on make<br>1 NO contact operate delayed | |
| **Thermal current $I_{th}$:** | 4 A | |
| **Switching capacity** | | |
| to AC 15: | 3 A / AC 230 V | IEC/EN 60 947-5-1 |
| **Electrical life** | | IEC/EN 60 947-5-1 |
| to AC 15 at 1 A, AC 230 V: | 5 x $10^5$ switching cycles | |

## Technical Data

| | | |
|---|---|---|
| **Short-circuit strength** | | |
| **max. fuse rating:** | 4 AgL | IEC/EN 60 947-5-1 |
| **Mechanical life:** | $10^8$ switching cycles | |

### General Data

| | | |
|---|---|---|
| **Operating mode:** | Continuous operation | |
| **Temperature range:** | - 20 ... + 60°C | |
| **Clearance and creepage distances** | | |
| rated impulse voltage / pollution degree: | 4 kV / 2 | IEC 60 664-1 |
| **EMC** | | |
| Electrostatic discharge: | 8 kV (contact) | IEC/EN 61 000-4-2 |
| HF irradiation: | 10 V/m | IEC/EN 61 000-4-3 |
| Fast transients: | 2 kV | IEC/EN 61 000-4-4 |
| Surge voltages between | | |
| wires for power supply: | 1 kV | IEC/EN 61 000-4-5 |
| between wire and ground: | 2 kV | IEC/EN 61 000-4-5 |
| Interference suppression: | Limit value class B | EN 55 011 |
| **Degree of protection** | | |
| Housing: | IP 40 | IEC/EN 60 529 |
| Terminals: | IP 20 | IEC/EN 60 529 |
| **Housing:** | Thermoplastic with V0 behaviour to UL subject 94 | |
| **Vibration resistance:** | Amplitude 0.35 mm frequency 10 ... 55 Hz | IEC/EN 60 068-2-6 |
| **Climate resistance:** | 20 / 060 / 04 | IEC/EN 60 068-1 |
| **Terminal designation:** | EN 50 005 | |
| **Wire connection:** | 1 x 4 mm² solid or<br>1 x 2.5 mm² stranded ferruled (isolated) or<br>2 x 1.5 mm² stranded ferruled (isolated) DIN 46 228-1/-2/-3/-4 or<br>2 x 2.5 mm² stranded ferruled DIN 46 228-1/-2/-3 | |
| **Wire fixing:** | Terminal screws M 3.5<br>Box terminal with wire protection | |
| **Mounting:** | DIN rail | IEC/EN 60 715 |
| **Weight:** | 85 g | |

### Dimensions

| | |
|---|---|
| **Width x height x depth:** | 22.5 x 84 x 97 mm |

## Standard Type

BC 7936N.38 AC/DC 24 V + AC 220 V ... 240 V 50/60 Hz 30 s 35 ms

Article number: 0052779

- Front colour grey, with box terminals
- Nominal voltage $U_N$: AC/DC 24 V + AC 220 V ... 240 V, 50/60 Hz
- Time range: 1.5 ... 30 s
- Contact switch-over time: 35 ms
- Width: 22.5 mm

## Ordering Example

BC 7936N .38 AC/DC 24 V + AC 220 ... 240 V 50 / 60 Hz 100 s / 35 ms

- Time range end value/ contact switch-over time
- Nominal frequency
- Nominal voltage
- Contacts
- Type

## Connection Examples

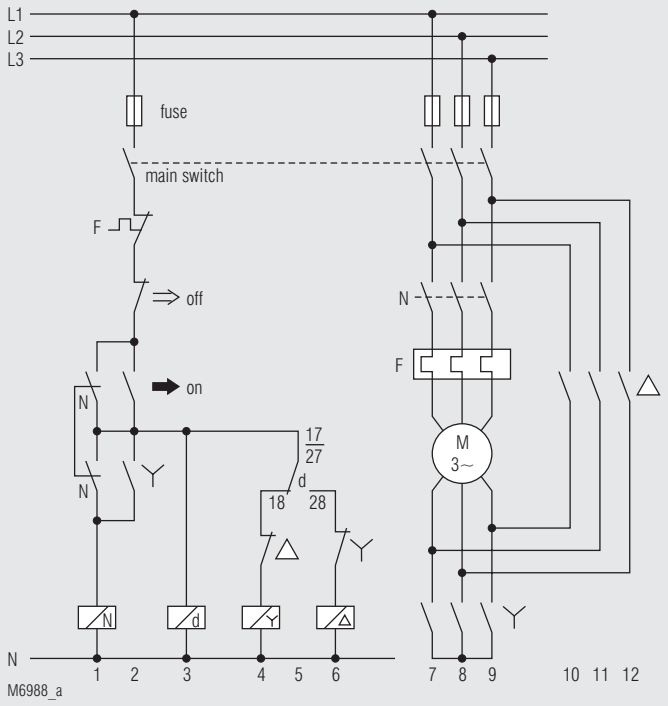


d = star-delta timer
N = main contactor
Y = star contactor
Δ = delta contactor

# MINITIMER
# Star-Delta Timer
# MK 7853N

- According to IEC/EN 61 812-1
- Time delay up to 100 s
- Repeat accuracy < ± 0.5 %
- Wire connection: also 2 x 1.5 mm² stranded ferruled, or 2 x 2.5 mm² solid DIN 46 228-1/-2/-3/-4
- As option with pluggable terminal blocks for easy exchange of devices
  - with screw terminals
  - or with cage clamp terminals
- Width 22.5 mm

## Product Description

The MK 7853N is a static star-delta-timer with 2 separate output relays. As soon as the operating voltage is applied, relay 1 will be energized and falls back after time delay. After elapse of the contact changeover time, the second relay switches on and remains in active position, as long as the star-delta-timer is energized.

## Approvals and Markings

CE

## Function Diagram

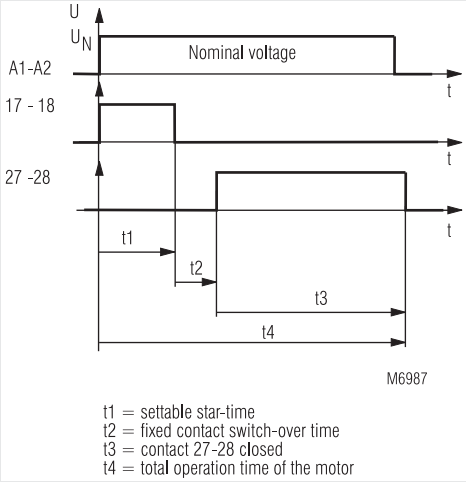


## Applications

Star-delta-starting circuit for squirrel cage motors

## Connection Terminals

| Terminal designation | Signal description |
|---|---|
| A1, A2 | Voltage supply AC/DC |
| 17, 18 | NO contacts<br>for star contactor |
| 27, 28 | NO contacts<br>for delta contactor |

## Indicators

| | |
|---|---|
| 1 yellow LED each: | on, when Y-Rel1 e.g. Δ-Rel2 energized |

## Circuit Diagram

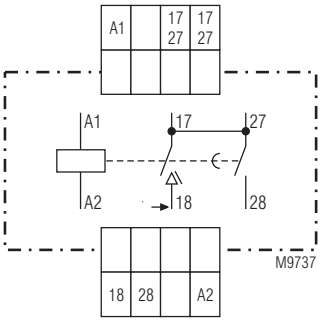

## Technical Data

**Time circuit**

| | | |
|---|---|---|
| **Time ranges:** | 0.5 ... 10 s | 1.5 ... 30 s |
| | 3.0 ... 60 s | 5.0 ... 100 s |
| **Contact changeover time:** | approx. 100 ms | |
| | approx. 35 ms | |
| | please state when ordering | |
| **Time setting:** | stepless on absolute scale | |
| **Recovery time** | | |
| tw 50 / 100: | 40 ms | |
| **Repeat accuracy:** | ≤ ± 0.5 % of the max. scale value | |
| **Voltage influence:** | ≤ 1 % | |
| **Temperature influence:** | 0.1 % / K | |

**Input**

| | | |
|---|---|---|
| **Nominal voltage $U_N$:** | AC/DC 24 V; AC/DC 42 V; | AC/DC 48 V |
| | AC 110 ... 127 V; AC 220 ... 240 V; | |
| | AC 380 ... 400 V | |
| **Voltage range:** | 0.8 ... 1,1 $U_N$ | |
| **Nominal consumption:** | AC 230 V | AC/DC 24 V |
| | 7 VA | 0.6 W |
| **Nominal frequency:** | 50 / 60 Hz | |
| **Frequency range:** | ± 5 % $f_N$ | |

**Output**

| | | |
|---|---|---|
| **Contacts:** | 1 fleeting on make | |
| | 1 NO contact delay on | |
| **Contact material:** | $AgSnO_2$ + 0,2 µm Au | |
| **Measured nominal voltage:** | AC 250 V | |
| **Release time:** | 40 ms | |
| **Thermal current $I_{th}$:** | 5 A | |
| **Switching capacity** | | |
| to AC 15: | | |
| NO contact: | 3 A / AC 230 V | IEC/EN 60 947-5-1 |
| NC contact: | 1 A / AC 230 V | IEC/EN 60 947-5-1 |
| **Electrical life** | | IEC/EN 60 947-5-1 |
| to AC 15 at 3 A, AC 230 V: | 5 x $10^5$ switching cycles | |
| **Permissible switching frequency:** | 6 000 switching cycles / h | |
| **Short-circuit strength max. fuse rating:** | 6 A gL | IEC/EN 60 947-5-1 |
| **Mechanical life:** | 20 x $10^6$ switching cycles | |

**General Data**

| | | |
|---|---|---|
| **Operating mode** | Continuous operation | |
| **Temperature range** | | |
| Operation: | - 20 ... + 60 °C | |
| Storage: | - 45 ... + 60 °C | |
| Relative air humidity: | 93 % at 40 °C | |
| Altitude: | < 2,000 m | |
| **Clearance and creepage distances** | | |
| rated impulse voltage / pollution degree: | 4 kV / 2 | IEC 60 664-1 |
| **EMC** | | |
| Electrostatic discharge: | 8 kV (air) | IEC/EN 61 000-4-2 |
| HF irradiation | | |
| 80 MHz ... 1 GHz: | 10 V / m | IEC/EN 61 000-4-3 |
| 1 GHz ... 2 GHz: | 3 V / m | IEC/EN 61 000-4-3 |
| 2 GHz ... 2.7 GHz: | 1 V / m | IEC/EN 61 000-4-3 |
| Fast transients: | 2 kV | IEC/EN 61 000-4-4 |
| Surge voltages between | | |
| wires for power supply: | 1 kV | IEC/EN 61 000-4-5 |
| between wire and ground: | 2 kV | IEC/EN 61 000-4-5 |
| HF-wire guided: | 10 V | IEC/EN 61 000-4-6 |
| Interference suppression: | Limit value class B | EN 55 011 |
| **Degree of protection** | | |
| Housing: | IP 40 | IEC/EN 60 529 |
| Terminals: | IP 20 | IEC/EN 60 529 |
| **Housing:** | Thermoplastic with V0 behaviour according with UL Subj. 94 | |
| **Vibration resistance:** | Amplitude 0.35 mm frequency 10 ... 55 Hz | IEC/EN 60 068-2-6 |
| **Climate resistance:** | 20 / 060 / 04 | IEC/EN 60 068-1 |

## Technical Data

| | | |
|---|---|---|
| **Terminal designation:** | EN 50 005 | |
| **Wire connection** | | DIN 46 228-1/-2/-3/-4 |
| **Screw terminals (integrated):** | 1 x 4 $mm^2$ solid or | |
| | 1 x 2.5 $mm^2$ stranded ferruled or | |
| | 2 x 1.5 $mm^2$ stranded ferruled or | |
| | 2 x 2.5 $mm^2$ solid | |
| Insulation of wires or sleeve length: | 8 mm | |
| **Plug in with screw terminals** | | |
| max. cross section for connection: | 1 x 2.5 $mm^2$ solid or | |
| | 1 x 2.5 $mm^2$ stranded ferruled | |
| Insulation of wires or sleeve length: | 8 mm | |
| **Plug in with cage clamp terminals** | | |
| max. cross section for connection: | 1 x 4 $mm^2$ solid or | |
| | 1 x 2.5 $mm^2$ stranded ferruled | |
| min. cross section for connection: | 0.5 $mm^2$ | |
| Insulation of wires or sleeve length: | 12 $^{\pm 0.5}$ mm | |
| **Wire fixing:** | Plus-minus terminal screws M 3.5 box terminals with wire protection or cage clamp terminals | |
| **Fixing torque:** | 0.4 Nm | |
| **Mounting:** | DIN rail | IEC/EN 60 715 |
| **Weight:** | 140 g | |

**Dimensions**

| | |
|---|---|
| **Width x height x depth:** | |
| MK 7853N: | 22.5 x 90 x 97 mm |
| MK 7853N PC: | 22.5 x 111 x 97 mm |
| MK 7853N PS: | 22.5 x 104 x 97 mm |

## Standard Type

MK 7853N AC 220 ... 240 V 30 s / 35 ms

| | |
|---|---|
| Article number: | 0061017 |
| • Output: | 1 fleeting on make<br>1 NO contact delay on |
| • Nominal voltage $U_N$: | AC 220 ... 240 V |
| • Time range / changeover time: | 1.5 ... 30 s / 35 ms |
| • Width: | 22.5 mm |

## Ordering Example

MK 7853N _ _ AC 220 ... 240 V 30 s / 35 ms

- Changeover time
- Time range
- Nominal voltage
- Type of terminals
  - without indication: terminal blocks fixed with screw terminals
  - PC (plug in cage clamp): pluggable terminal blocks with cage clamp terminals
  - PS (plug in screw): pluggable terminal block with screw terminals
- Type

## Options with Pluggable Terminal Blocks

Screw terminal
(PS/plugin screw)

Cage clamp
(PC/plugin cage clamp)

## Notes

Removing the terminal blocks with cage clamp terminals

1. The unit has to be disconnected.
2. Insert a screwdriver in the side recess of the front plate.
3. Turn the screwdriver to the right and left.
4. Please note that the terminal blocks have to be mounted on the belonging plug in terminations.

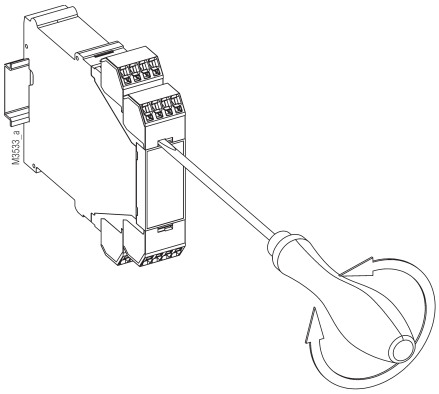


## Connection Examples

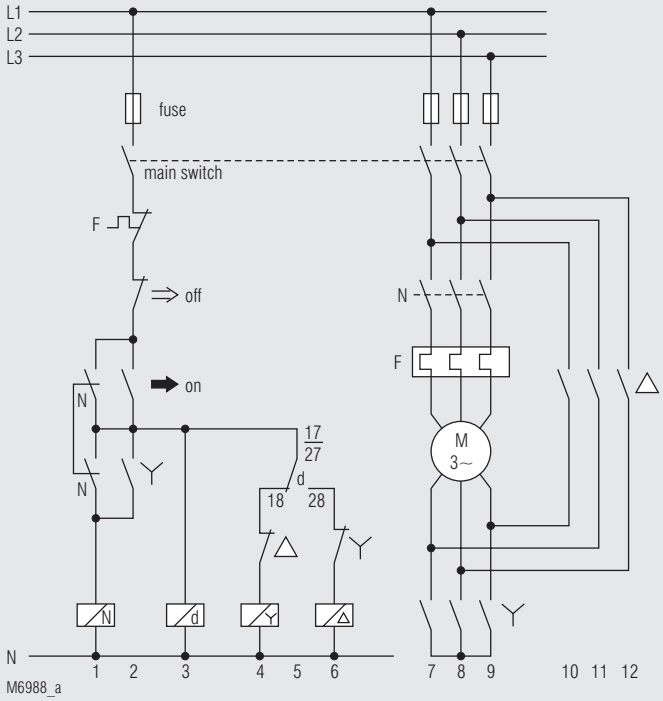


d = star-delta timer
N = main contactor
Y = star contactor
Δ = delta contactor

# MINITIMER
# Fleeting Action Timer
# MK 9988

0226784

- According to IEC/EN 61 812-1
- Programmable: fleeting on make, fleeting on break, fleeting on make and brake
- Fleeting time 0.3 ... 0.6 s fixed
- Repeat accuracy < ± 5 %
- LED indication for supply and contact position
- 2-wire-proximity sensor control
- Available with 1 or 2 changeover contacts
- Width 22.5 mm

## Function Diagram

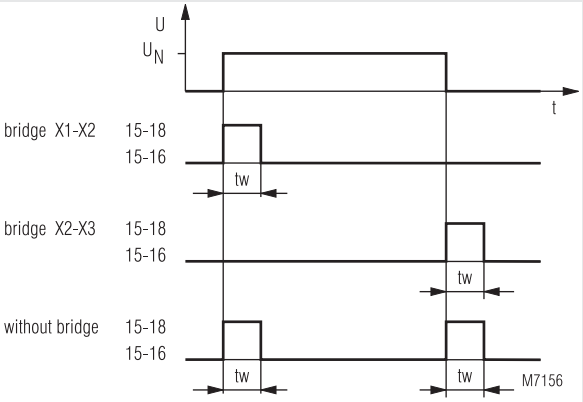


## Approvals and Markings

CE

## Applications

Time-dependent controllers

## Indicators

LED: on, when supply connected

## Notes

Info On terminals X1, X2, X3 only short wire links must be used to avoid capacitive coupled interference.

## Circuit Diagram

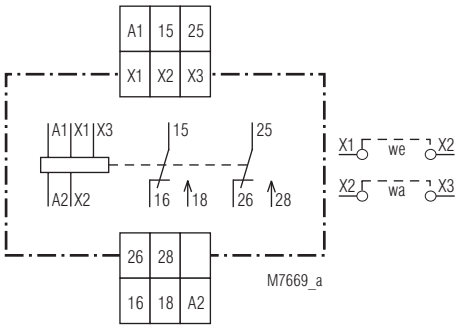


MK 9988.52

## Connection Terminals

| Terminal designation | Signal description |
|---|---|
| A1, A2 | operating voltage |
| X1, X2, X3 | Programming inputs<br>X1, X2, X3 open:<br>fleeting on make and break<br>X1, X2 bridged:<br>fleeting on make<br>X2, X3 bridged:<br>fleeting on break |
| 15, 16, 18 | 1. fleeting (changeover contact) |
| 25, 26, 28 | 2. fleeting (changeover contact) |

## Technical Data

**Time circuit**

| | |
|---|---|
| **Fleeting time:** | 0.3 ... 0.6 s fixed |
| **Repeat accuracy:** | < ± 5 % |
| **Min. switch-off time:** | 1 s |
| **Voltage influence:** | - 5 % / + 10 % |
| **Temperature influence:** | ± 0.25 % / K |

**Input**

| | |
|---|---|
| **Nominal voltage $U_N$:** | AC 110, 127, 220 ... 240 V<br>AC/DC 24, 42, 48 V |
| **Voltage range:** | 0.8 ... 1.1 $U_N$ |
| **Nominal power consumption:** | 8 VA / AC 230 V |
| **Nominal frequency:** | 50 / 60 Hz |
| **Permissible residual current:** | ≤ 5 mA |

**Output**

| | | |
|---|---|---|
| **Contacts:** | | |
| MK 9988.51: | 1 fleeting (changevoer contact) programmable | |
| MK 9988.52: | 2 fleeting (changeover contacts) programmable | |
| **Contact material:** | $AgSnO_2$ | |
| **Measured nominal voltage:** | AC 250 V | |
| **Thermal current $I_{th}$:** | 5 A | |
| **Switching capacity** | | |
| to AC 15: | | |
| NO contact: | 3 A / AC 230 V | IEC/EN 60 947-5-1 |
| NC contact: | 1 A / AC 230 V | IEC/EN 60 947-5-1 |
| **Electrical life** | | IEC/EN 60 947-5-1 |
| to AC 15 at 3 A, AC 230 V: | 5 x $10^5$ switching cycles | |
| **Permissible switching frequency:** | 3 000 switching cycles / h | |
| **Short-circuit strength max. fuse rating:** | 6 A gG / gL | IEC/EN 60 947-5-1 |
| **Mechanical life:** | 20 x $10^6$ switching cycles | |

**General Data**

| | | |
|---|---|---|
| **Operating mode:** | Continuous operation | |
| **Temperature range** | | |
| Operation: | - 20 ... + 60 °C | |
| Storage: | - 40 ... + 70 °C | |
| **Relative air humidity** | 93 % at 40 °C | |
| **Altitude:** | < 2,000 m | |
| **Clearance and creepage distances** | | |
| rated impulse voltage / pollution degree: | 4 kV / 2 (basis insulation) | IEC 60 664-1 |
| Overvoltage category: | III | |
| Insulation test voltage, type test: | 2,5 kV; 1 min | |
| **EMC** | | |
| Electrostatic discharge: | 6 kV (contact) | IEC/EN 61 000-4-2 |
| | 8 kV (air) | IEC/EN 61 000-4-2 |
| HF irradiation | | |
| 80 MHz ... 1 GHz: | 20 V / m | IEC/EN 61 000-4-3 |
| 1 GHz ... 2.7 GHz: | 10 V / m | IEC/EN 61 000-4-3 |
| Fast transients: | 4 kV | IEC/EN 61 000-4-4 |
| Surge voltages between | | |
| wires for power supply: | 2 kV | IEC/EN 61 000-4-5 |
| between wire and ground: | 4 kV | IEC/EN 61 000-4-5 |
| HF-wire guided: | 12 V | IEC/EN 61 000-4-6 |
| Interference suppression: | Limit value class B | EN 55 011 |
| **Degree of protection** | | |
| Housing: | IP 40 | IEC/EN 60 529 |
| Terminals: | IP 20 | IEC/EN 60 529 |
| **Housing:** | Thermoplastic with V0 behaviour according to UL Subj. 94 | |
| **Vibration resistance:** | Amplitude 0.35 mm frequency 10 ... 55 Hz | IEC/EN 60 068-2-6 |
| **Climate resistance:** | 20 / 060 / 04 | IEC/EN 60 068-1 |

## Technical Data

| | | |
|---|---|---|
| **Terminal designation:** | EN 50 005 | |
| **Wire connection:** | 2 x 1.5 $mm^2$ solid or stranded wire with sleeve DIN 46 228-1/-2/-3/-4 | |
| Insulation of wires or sleeve length: | 8 mm | |
| **Wire fixing:** | Flat terminals with self-lifting clamping piece | IEC/EN 60 999-1 |
| **Fixing torque:** | 0.4 Nm | |
| **Mounting:** | DIN rail | IEC/EN 60 715 |
| **Weight:** | 140 g | |

**Dimensions**

| | |
|---|---|
| **Width x height x depth:** | 22.5 x 82 x 99 mm |

## Standard Type

| | | |
|---|---|---|
| MK 9988.51 | AC 220 ... 240 V | 50 / 60 Hz |
| Article number: | | 0003532 |
| • Output: | | 1 fleeting (changevoer contact) |
| • Nominal voltage $U_N$: | | AC 220 ... 240 V |
| • Width: | | 22.5 mm |

## Ordering Example

MK 9988 .51 AC 230 V 50 / 60 Hz

- 50 / 60 Hz — Nominal frequency
- AC 230 V — Nominal voltage
- .51 — Contacts
  - .51 = 1 fleeting (changevoer contact)
  - .52 = 2 fleeting (changevoer contact)
- MK 9988 — Type

## Accessories

| | |
|---|---|
| ET 4752-143: | Marking plate<br>Article number: 0043203 |

# MINITIMER
## Fleeting Action Relay, adjustable
## MK 9989

0221584

- According to IEC/EN 61 812-1
- Fleeting make
- Fleeting time up to 300 s or on request
- Repeat accuracy < ± 0,5 %
- Setting on absolute scale
- Available as 2-voltage version
- LED displays for availability and contact position
- 2 fleeting make or
  1 fleeting make and 1 non-delayed changeover contact
- Also available with instantaneous contact
- Also available with CSA approval
- Width 22.5 mm

### Function Diagram

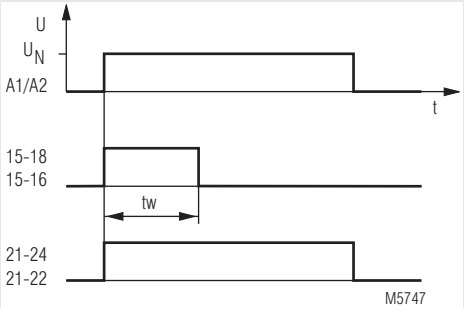


### Approvals and Markings

### Applications

Time-dependent circuits

### Indicators

| | |
|---|---|
| upper LED: | on, when supply connected |
| lower LED: | on,when output relay active |

### Circuit Diagrams

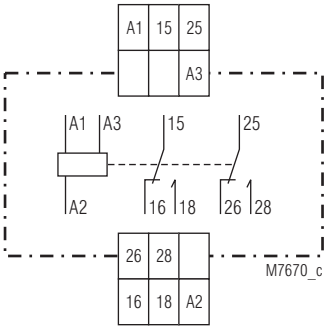


MK 9989

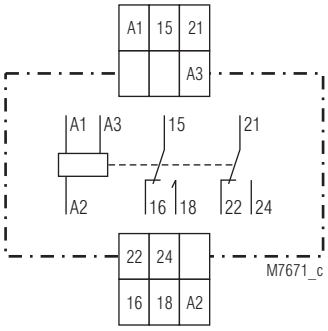


MK 9989.77

### Connection Terminals

| Terminal designation | Signal description |
|---|---|
| A1, A3(+), A2 | operating voltage |
| 15, 16, 18 | 1. fleeting (changeover contact) |
| 25, 26, 28<br>21, 22, 24 | 2. fleeting (changeover contact)<br>Instantaneous contact (changeover contact) at MK 9989.77 |

## Technical Data

### Time circuit

| | | |
|---|---|---|
| **Time ranges:** | 0.05 ... 1 s | 1.5 ... 30 s |
| | 0.15 ... 3 s | 5 ... 100 s |
| | 0.5 ... 10 s | 15 ... 300 s |
| | Other time ranges on request | |
| **Time setting:** | Stepless on absolute scale | |
| **Recovery time** | | |
| tw 50 / 100: | < 40 ms | |
| **Repeat accuracy:** | < ± 0.5 % of full-scale value | |
| **Voltage influence:** | ≤ 1 % | |
| **Temperature influence:** | ± 0.1 % / K | |

### Input

| | |
|---|---|
| **Nominal voltage $U_N$:** | AC/DC 24 V[1)] + AC 220 ... 240 V[2)] |
| | [1)] at terminals A3 - A2 |
| | [2)] at terminals A1 - A2 |
| **Voltage range:** | AC 0.8 ... 1.1 $U_N$ |
| | DC 0.9 ... 1.25 $U_N$ |
| **Release voltage:** | 15 % $U_N$ |
| **Nominal power consumption:** | AC 230 V DC 24 V |
| | 8.5 VA 1 W |
| **Nominal frequency:** | 50 / 60 Hz |
| **Frequency range:** | ± 5 % $f_N$ |
| **Permissible residual current:** | 5 mA |

### Output

| | | |
|---|---|---|
| **Contacts** | | |
| MK 9989: | 2 fleeting make (changeover contacts) | |
| MK 9989.77: | 1 fleeting make (changeover contact) | |
| | 1 non-delayed changeover contact | |
| **Contact material:** | $AgSnO_2$ | |
| **Measured nominal voltage:** | AC 250 V | |
| **Thermal current $I_{th}$:** | 5 A | |
| **Switching capacity** | | |
| to AC 15: | | |
| NO contact: | 3 A / AC 230 V | IEC/EN 60 947-5-1 |
| NC contact: | 1 A / AC 230 V | IEC/EN 60 947-5-1 |
| **Electrical life** | | IEC/EN 60 947-5-1 |
| to AC 15 at 3 A, AC 230 V: | 5 x $10^5$ switching cycles | |
| **Permissible switching frequency:** | 6 000 switching cycles / h | |
| **Short-circuit strength max. fuse rating:** | 6 A gG / gL | IEC/EN 60 947-5-1 |
| **Mechanical life:** | > 30 x $10^6$ switching cycles | |

### General Data

| | | |
|---|---|---|
| **Operating mode:** | Continuous operating | |
| **Temperature range** | | |
| Operation: | - 20 ... + 60 °C | |
| Storage: | - 25 ... + 70 °C | |
| **Relative air humidity** | 93 % at 40 °C | |
| **Altitude:** | < 2,000 m | |
| **Clearance and creepage distances** | | |
| rated impulse voltage / pollution degree: | 4 kV / 2 (basis insulation) | IEC 60 664-1 |
| Overvoltage category: | III | |
| Insulation test voltage, type test: | 2.5 kV; 1 min | |
| **EMC** | | |
| Electrostatic discharge: | 8 kV (air) | IEC/EN 61 000-4-2 |
| HF irradiation | | |
| 80 MHz ... 1 GHz: | 12 V / m | IEC/EN 61 000-4-3 |
| 1 GHz ... 2.7 GHz: | 10 V / m | IEC/EN 61 000-4-3 |
| Fast transients: | 4 kV | IEC/EN 61 000-4-4 |
| Surge voltages between | | |
| wires for power supply: | 2 kV | IEC/EN 61 000-4-5 |
| between wire and ground: | 4 kV | IEC/EN 61 000-4-5 |
| HF-wire guided: | 10 V | IEC/EN 61 000-4-6 |
| Interference suppression: | Limit value class B | EN 55 011 |

## Technical Data

### Degree of protection

| | | |
|---|---|---|
| Housing: | IP 40 | IEC/EN 60 529 |
| Terminals: | IP 20 | IEC/EN 60 529 |
| **Housing:** | Thermoplastic with V0 behaviour according to UL Subject 94 | |
| **Vibration resistance:** | Amplitude 0.35 mm, frequency 10 ... 55 Hz, | IEC/EN 60 068-2-6 |
| **Climate resistance:** | 20 / 060 / 04 | IEC/EN 60 068-1 |
| **Terminal designation:** | EN 50 005 | |
| **Wire connection:** | 2 x 1.5 $mm^2$ solid or | |
| | 2 x 1.0 $mm^2$ stranded wire with sleeve | |
| | DIN 46 228-1/-2/-3/-4 | |
| Insulation of wires or sleeve length: | 8 mm | |
| **Wire fixing:** | Flat terminals with self-lifting clamping piece | IEC/EN 60 999-1 |
| **Fixing torque:** | 0.4 Nm | |
| **Mounting:** | DIN rail | IEC/EN 60 715 |
| **Weight:** | 140 g | |

### Dimensions

| | |
|---|---|
| **Width x height x depth:** | 22.5 x 82 x 99 mm |

### Standard Type

MK 9989 AC/DC 24 V + AC 220 ... 240 V 50/60Hz 10 s

| | |
|---|---|
| Article number: | 0044947 |
| • Output: | 2 fleeting make (changeover contacts) |
| • Nominal voltage $U_N$: | AC/DC 24 V + AC 220 ... 240 V |
| • Time range: | 0.5 ... 10 s |
| • Width: | 22.5 mm |

### Ordering Example

MK 9989 .77 AC/DC 24 V + AC 230 ... 240 V 50 / 60 Hz 30 s

- Time range end value
- Nominal frequency
- Nominal voltage
- Contact
- Type

# MINITIMER
## Cyclic Timer
## IK 7854, SK 7854

- According to IEC/EN 61 812-1
- 8 time ranges from 0.05 s to 300 h selectable via rotational switches
- Impulse and break time separately adjustable
- Selectable start with impulse or break
- Voltage range AC/DC 12 ... 240 V
- Adjustment aid for quick setting of long time values
- Suitable for 2-wire proximity sensor control
- LED indicators for operation, contact position and time delay
- 1 changeover contact
- As option connection of 2 remote potentiometers 10 kΩ
- Devices available in 2 enclosure versions:
  IK 7854: depth 59 mm, with terminals at the bottom for installation systems and industrial distribution systems according to DIN 43 880
  SK 7854: depth 98 mm, with terminals at the top for cabinets with mounting plate and cable duct
- 17.5 mm width

### Function Diagram

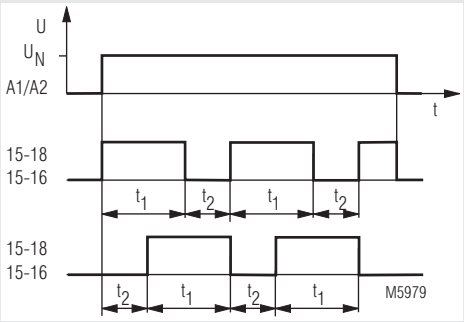


### Approvals and Markings

CE

### Application

Time-dependent controllers

### Indicators

| | |
|---|---|
| green LED: | on when voltage connected |
| yellow LED "R/t": | shows status of output relay and time delay: |
| -Flashing (short on, long off) | output relay not active; time delay t2 (break time) |
| -Flashing (long on, short off) | output relay active; time delay t1 (pulse time) |

### Circuit Diagrams

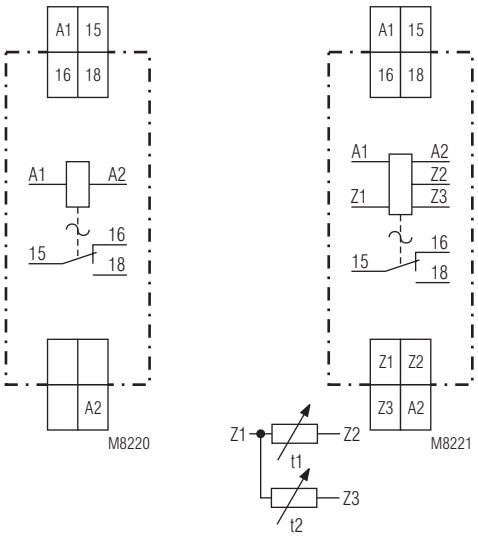


IK 7854.81
SK 7854.81

IK 7854.81/300
SK 7854.81/300

### Connection Terminals

| Terminal designation | Signal description |
|---|---|
| A1 | L / + |
| A2 | N / - |
| 15, 16, 18 | Changeover contact |
| Z1, Z2, Z3 (only at /300) | Input to connect two remote potentiometer for time setting t1 and t2 |

## Notes

**Control of A1-A2 with proximity sensors**
The input can be controlled by DC 3 wire or AC/DC 2 wire proximity sensors. For operating voltage > 24 V and usage of sensors without built-in short circuit protection a protection resistor on A1 is recommendend to reduce the inrush current. The dimension is as follows:

$R_v \approx$ operating voltage / max. switching current of sensor

The series resistor must not be selected higher than necessary.
Max. values are:

| | | | | | |
|---|---|---|---|---|---|
| Operating voltage: | 48 V | 60 V | 110 V | 230 V | |
| Series resistor $R_v$ max: | 270 Ω | 390 Ω | 680 Ω | 1.8 kΩ | (1 W) |

**Setting**
A change of the settings for time range and time will be valid immediately. Please note, that a change of time range or time setting during elapse of time can lead to unintended switching of the output contacts.

**Adjustment assistance**
The flashing period of the yellow LED is 1 s ± 4% and can be used to adjust the time. Especially on the lower end of scale and for long times it is suitable as the multiplication factors between the different time ranges are exact without tolerance.
Example:
The required time is 40 min. It has to be adjusted within the range 3 ... 300 min. The time check takes too long as several timing cycles would be necessary for a precise value.

For faster adjustment the setting is made to 0.03 ... 3 min. On this range the potentiometer should be set to 0.4 min. (= 24 sec). With the right potentiometer setting the LED must show 24 flashing cycles. After that the time range is switched over to 3 ... 300 min and the setting is complete.

**Remote potentiometers**
With the variant IK/SK 7854.81/300 both time settings can also be made via remote potentiometers of 10 kOhms:
- Terminals Z1-Z2: potentiometer for pulse time (t1)
- Terminals Z1-Z3: potentiometer for break time (t2)

When connecting a remote potentiometer, the corresponding potentiometer has to be set to min. If no remote potentiometers are required the terminals Z1-Z2 resp. Z2-Z3 have to be linked.

The wires to the remote potentiometers should be installed separately from the lines with mains voltage. If this is not possible, a screened cable is recommendet where the shield is connected to Z1.

To terminals Z1, Z2 and Z3 no external voltage must be connected, as the unit might be damaged.
Terminals Z1, Z2 and Z3 do not have a galvanic separation to terminals A1/A2!

## Setting

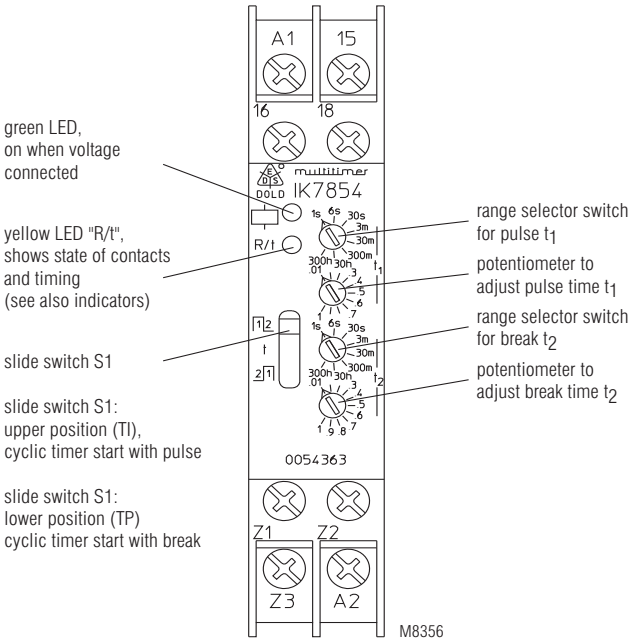

## Technical Data

**Time circuit**

| | |
|---|---|
| **Time ranges:** | 8 time ranges for pulse and break time, settable via rotational switch: |
| | 0.05 ... 1 s  0.3 ... 30 min. |
| | 0.06 ... 6 s  3 ... 300 min. |
| | 0.3 ... 30 s  0.3 ... 30 h |
| | 0.03 ... 3 min.  3 ... 300 h |
| **Time setting t1, t2:** | continuous, 1:100 on relative scale |
| **Recovery time:** | |
| at DC 24 V: | approx. 15 ms |
| at DC 240 V: | approx. 50 ms |
| at AC 230 V: | approx. 80 ms |
| **Repeat accuracy:** | ± 0.5 % of selected end scale value |
| **Voltage and Temperature influence:** | < 1 % with the complete operating range |

**Input**

| | |
|---|---|
| **Nominal voltage $U_N$:** | AC/DC 12 ... 240 V |
| **Voltage range:** | 0.8 ... 1.1 $U_N$ |
| **Frequency range (AC):** | 45 ... 400 Hz |
| **Nominal consumption** | |
| at AC 12 V: | approx.1.5 VA |
| at AC 24 V: | approx. 2 VA |
| at AC 230 V: | approx. 3 VA |
| at DC 12 V: | approx. 1 W |
| at DC 24 V: | approx. 1 W |
| at DC 230 V: | approx. 1 W |
| **Release voltage (A1/A2)** | |
| AC 50 Hz: | approx. 7.5 V |
| DC: | approx. 7 V |
| **Max. permitted residual current with 2-wire proximity sensor control (A1-A2)** | |
| up to AC/DC 150 V: | AC resp. DC 5 mA |
| up to AC/DC 264 V: | AC resp. DC 3 mA |

**Output**

| | | |
|---|---|---|
| **Contacts:** | | |
| IK/SK 7854.81: | 1 changeover contact | |
| **Contact material:** | AgNi | |
| **Measured nominal voltage:** | AC 250 V | |
| **Thermal current $I_{th}$:** | 4 A (see see quadratic total current limit curve) | |
| **Switching capacity** | | |
| to AC 15 | | |
| NO contact: | 3 A / AC 230 V | IEC/EN 60 947-5-1 |
| NC contact: | 1 A / AC 230 V | IEC/EN 60 947-5-1 |
| to DC 13: | 1 A / DC 24 V | |
| **Electrical life** | | |
| at AC 15 to 1 A, AC 230 V: | 1.5 x $10^5$ switching cycles | IEC/EN 60 947-5-1 |
| **Permissible switching frequency:** | 36 000 switching cycles / h | |
| **Short circuit strength max. fuse rating:** | 4 A gL | IEC/EN 60 947-5-1 |

## Technical Data

| | | |
|---|---|---|
| **Mechanical life:** | 30 x $10^6$ switching cycles | |
| **General Data** | | |
| **Operating mode:** | Continuous operation | |
| **Temperature range:** | | |
| Operation: | - 40 ... + 60 °C (higher temperature with limitations see quadratic total current limit curve) | |
| Storage: | - 40 ... + 70 °C | |
| **Relative air humidity:** | 93 % at 40 °C | |
| **Altitude:** | < 2.000 m | |
| **Clearance and creepage distances** | | |
| rated impulse voltage / pollution degree: | 4 kV / 2 (basis insulation) | IEC 60 664-1 |
| Overvoltage category: | III | |
| Insulation test voltage, type test: | 2.5 kV; 1 min | |
| **EMC** | | |
| Electrostatic discharge: | 8 kV (air) | IEC/EN 61 000-4-2 |
| HF irradiation | | |
| 80 MHz ... 1 GHz: | 20 V / m | IEC/EN 61 000-4-3 |
| 1 GHz ... 2.7 GHz: | 10 V / m | IEC/EN 61 000-4-3 |
| Fast transients: | | |
| A1/A2: | 4 kV | IEC/EN 61 000-4-4 |
| Z1/Z2/Z3: | 2 kV | IEC/EN 61 000-4-4 |
| Surge voltages between | | |
| wires for power supply: | 2 kV | IEC/EN 61 000-4-5 |
| between wire and ground: | 4 kV | IEC/EN 61 000-4-5 |
| HF-wire guided: | 10 V | IEC/EN 61 000-4-6 |
| Interference suppression: | Limit value class B | EN 55011 |
| **Degree of protection** | | |
| Housing: | IP 40 | IEC/EN 60 529 |
| Terminals: | IP 20 | IEC/EN 60 529 |
| **Housing:** | Thermoplastic with V0 behaviour according to UL subject 94 | |
| **Vibration resistance:** | Amplitude 0.35 mm, frequency10 ... 55 Hz, | IEC/EN 60 068-2-6 |
| **Climate resistance:** | 40 / 060 / 04 | IEC/EN 60 068-1 |
| **Terminal designation:** | EN 50 005 | |
| **Wire connection:** | DIN 46 228-1/-2/-3/-4 | |
| Cross section: | 2 x 2.5 $mm^2$ solid or 2 x 1.5 $mm^2$ stranded wire with sleeve | |
| Stripping length: | 10 mm | |
| **Wire fixing:** | Flat terminals with self-lifting clamping piece | IEC/EN 60 999-1 |
| **Fixing torque:** | 0.8 Nm | |
| **Mounting:** | DIN rail | IEC/EN 60 715 |
| **Weight:** | | |
| IK 7854: | approx. 65 g | |
| SK 7854: | approx. 84 g | |

**Dimensions**

| | |
|---|---|
| **Width x height x depth:** | |
| IK 7854: | 17.5 x 90 x 59 mm |
| SK 7854: | 17.5 x 90 x 98 mm |

## Standard Type

IK 7854.81 AC/DC 12 ... 240 V 0.05 s ... 300 h

| | |
|---|---|
| Article number: | 0054362 |
| • Output: | 1 changeover contact |
| • Nominal voltage $U_N$: | AC/DC 12 ... 240 V |
| • Time ranges: | 0.05 s ... 300 h |
| • Width: | 17.5 mm |

SK 7854.81 AC/DC 12 ... 240 V 0.05 s ... 300 h

| | |
|---|---|
| Article number: | 0059557 |
| • Output: | 1 changeover contact |
| • Nominal voltage $U_N$: | AC/DC 12 ... 240 V |
| • Time ranges: | 0.05 s ... 300 h |
| • Width: | 17.5 mm |

## Variant

IK 7854.81/300: - Connection facility for 2 remote potentiometers 10 kOhms to adjust pulse and break time

### Ordering example for variant

IK 7854 .81 /_ _ _ AC/DC 12 ... 240 V 0.05 s ... 300 h

- 0.05 s ... 300 h — Time ranges
- AC/DC 12 ... 240 V — Nominal voltage
- /_ _ _ — Variant, if required
- .81 — Contacts
- IK 7854 — Type

## Characteristics

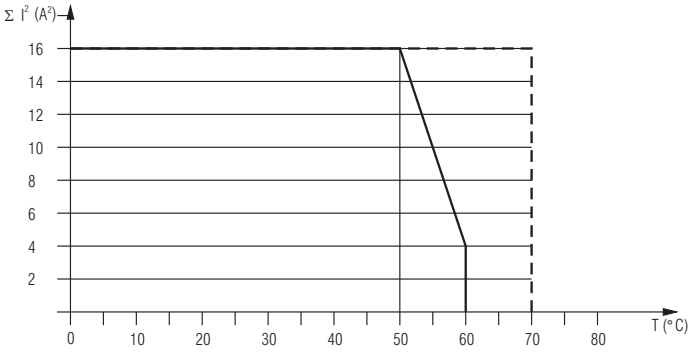


device mounted away from heat generation components.

device mounted without distance heated by devices with same load.

## Connection Example

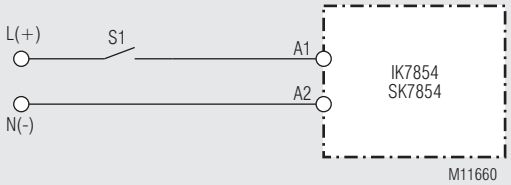


## Accessories

AD 3: External potentiometer 10 kΩ
Article number: 0028962

The external potentiometer is used for remote setting of the time delay. The internal potentiometer of the timer must be set to min. time delay.

Degree of protection front side: IP 60

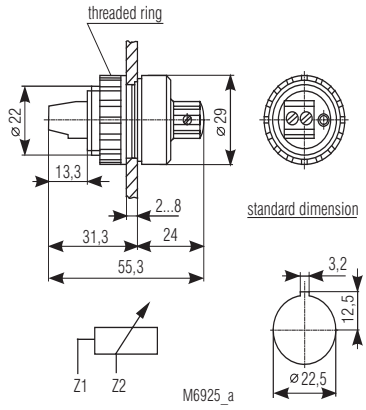

# MINITIMER
## Cyclic Timer
## BC 7937N

0226191

- According to IEC/EN 61 812-1
- With 10 time ranges from 0.05 s ... 300 h
- Impulse and break time separately adjustable
- Selectable start with impulse or break
- AC/DC 24 ... 240 V
- Control input for interruption of the time elapse
- LED indication for voltage supply and contact position
- Flashing function during elapse of time
- 1 changeover contact
- Wire connection: also 2 x 1.5 mm² stranded ferruled (isolated), DIN 46 228-1/-2/-3/-4 or 2 x 2.5 mm² stranded ferruled DIN 46 228-1/-2/-3
- Width 22.5 mm

### Circuit Diagram

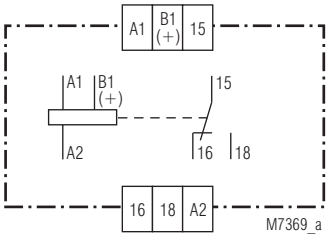


### Approvals and Markings

CE

### Applications

Time-dependent controllers

### Indicators

| | |
|---|---|
| green LED: | on, when supply connected |
| yellow LED: | see Function Diagramm |

### Notes

When changing the time ranges for impulse / break the device must be reset by disconnecting the supply voltage. By energising control input B1 the time elapse is stopped. E.g. activating control input B1 during timing of $T_{impuls}$ for the time B1 the output is energized for $T_{impuls}$ and $T_{B1}$.

### Function Diagram

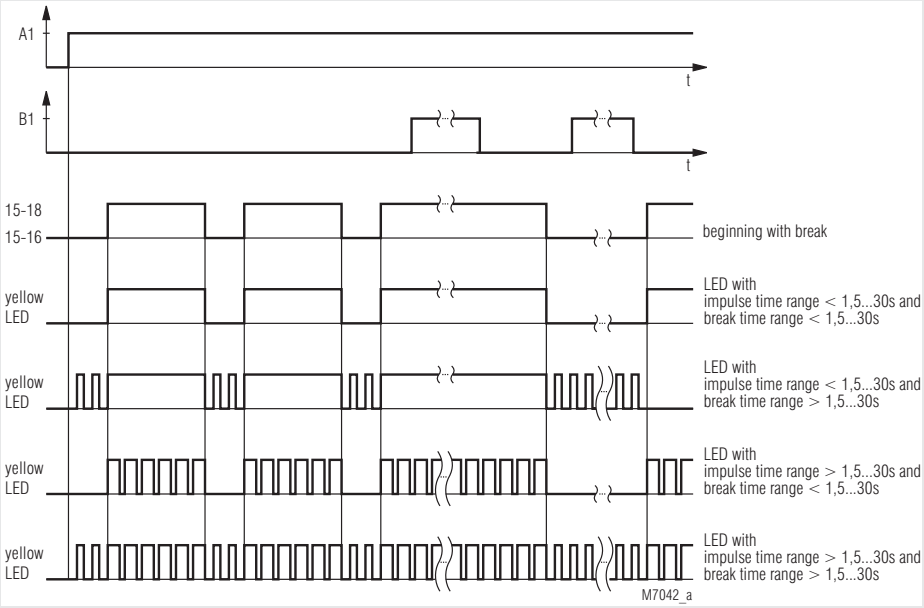

## Technical Data

### Time Circuit

| | | |
|---|---|---|
| **Time ranges:** | 1) 0.05 ... 1 s | 7) 1.5 ... 30 min |
| | 2) 0.15 ... 3 s | 8) 15 ... 300 min |
| | 3) 0.5 ... 10 s | 9) 1.5 ... 30 h |
| | 4) 1.5 ... 30 s | 10) 15 ... 300 h |
| | 5) 5 ... 100 s | |
| | 6) 15 ... 300 s | |
| | selectable via time-range-switch (ZB) | |
| **Time setting:** | infinite variable via potentiometer (Zeit) | |
| **Recovery time:** | ≤ 50 ms | |
| **Repeat accuracy:** | ≤ 2 % | |
| **Voltage influence:** | ≤ 1 % | |
| **Temperature influence:** | ≤ 0.05 % / K | |

### Input

| | |
|---|---|
| **Nominal voltage $U_N$** (A1/A2 and B1/A2): | AC/DC 24 ... 240 V, DC 12 V |
| **Voltage range:** | 0.8 ... 1.1 $U_N$ |
| **Nominal consumption:** | |
| at AC 240 V: | 4 VA |
| at DC 240 V: | 1.33 W |
| **Nominal frequency:** | 50 / 60 Hz |
| **Release voltage:** | AC: ≥ 15 % $U_N$ |
| | DC: ≥ 5 % $U_N$ |

### Output

| | | |
|---|---|---|
| **Contacts:** | 1 changeover contact | |
| **Thermal current $I_{th}$:** | 4 A | |
| **Switching capacity** | | |
| to AC 15: | 3 A / AC 230 V | IEC/EN 60 947-5-1 |
| to DC 13: | 2 A / DC 24 V | IEC/EN 60 947-5-1 |
| **Electrical life** | | IEC/EN 60 947-5-1 |
| to AC 15 at 1 A, AC 230 V: | typ. 150 000 switching cycles | |
| to DC 13 at 1 A, DC 24 V: | typ. 100 000 switching cycles | |
| **Short circuit strength** | | |
| **max. fuse rating:** | 4 A gL | IEC/EN 60 947-5-1 |
| **Mechanical life:** | $10^8$ switching cycles | |

### General Data

| | | |
|---|---|---|
| **Operating mode:** | Continuous operation | |
| **Temperature range:** | 0 ... + 60°C | |
| **Clearance and creepage distances** | | |
| rated impulse voltage / pollution degree: | 4 kV / 2 | IEC 60 664-1 |
| **EMC** | | |
| Electrostatic discharge: | 6 kV (air) | IEC/EN 61 000-4-2 |
| HF irradiation: | 10 V/m | IEC/EN 61 000-4-3 |
| Fast transients: | 2 kV | IEC/EN 61 000-4-4 |
| Surge voltages between | | |
| wired for power supply: | 1 kV | IEC/EN 61 000-4-5 |
| between wire and ground: | 2 kV | IEC/EN 61 000-4-5 |
| HF wire guided: | 10 V | IEC/EN 61 000-4-6 |
| Interference suppression: | Limit value class B | EN 55 011 |
| **Degree of protection** | | |
| Housing: | IP 40 | IEC/EN 60 529 |
| Terminals: | IP 20 | IEC/EN 60 529 |
| **Housing:** | Thermoplastic with V0 behaviour to UL subject 94 | |
| **Vibration resistance:** | Amplitude 0.35 mm frequency 10 ... 55 Hz | IEC/EN 60 068-2-6 |
| **Climate resistance:** | 0 / 060 / 04 | IEC/EN 60 068-1 |
| **Terminal designation:** | EN 50 005 | |
| **Wire connection:** | 1 x 4 mm² solid or<br>1 x 2.5 mm² stranded ferruled (isolated) or<br>2 x 1.5 mm² stranded ferruld (isolated) DIN 45 228-1/-2/-3/-4 or<br>2 x 2.5 mm² stranded ferruled DIN 46 228-1/-2/-3 | |

## Technical Data

| | | |
|---|---|---|
| **Wire fixing**: | Terminal screws M 3.5<br>Box terminal with wire protection | |
| **Mounting:** | DIN rail | IEC/EN 06 715 |
| **Weigth:** | 110 g | |

### Dimensions

| | |
|---|---|
| **Width x height x depth:** | 22.5 x 84 x 97 mm |

## Standard Type

BC 7937N.81 AC/DC 24 ... 240 V 50/60 Hz

| | |
|---|---|
| Article number: | 0052780 |
| • Front colour grey, with box terminals | |
| • Output: | 1 changeover contact |
| • Nominal voltage $U_N$: | AC/DC 24 ... 240 V |
| • Width: | 22.5 mm |

## Ordering Example

BC 7937N .81 AC/DC 24 ... 240 V 50 / 60 Hz

- 50 / 60 Hz — Nominal frequency
- AC/DC 24 ... 240 V — Nominal voltage
- .81 — Contacts
- BC 7937N — Type

## Connection Examples

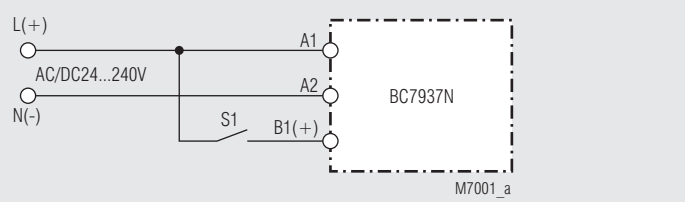


Connection example with control contact S1 for interruption of the time elapse

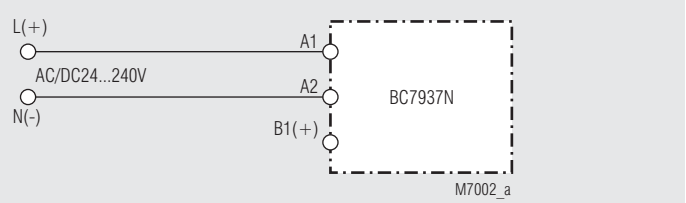


Connection example without control contact

## Setting

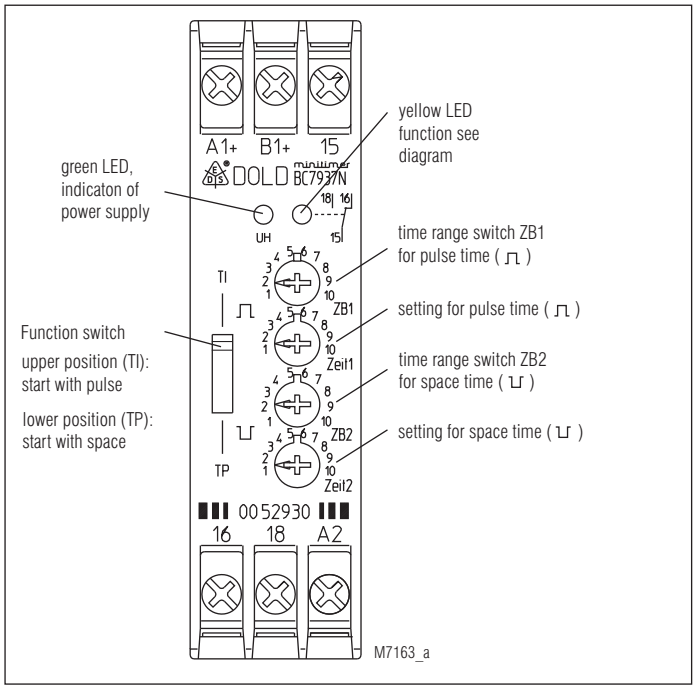
A1+
B1+
15
DOLD
BC7937N
18
16
15
UH
green LED,
indicaton of
power supply
yellow LED
function see
diagram
time range switch ZB1
for pulse time ( ⎍ )
setting for pulse time ( ⎍ )
time range switch ZB2
for space time ( ⊔ )
setting for space time ( ⊔ )
Function switch
upper position (TI):
start with pulse
lower position (TP):
start with space
TI
TP
ZB1
Zeit1
ZB2
Zeit2
00529 30
16
18
A2
M7163_a

# MINITIMER
## Cyclic Timer
## MK 7854N

0239281

- According to IEC/EN 61 812-1
- 8 time ranges from 0.05 s to 300 h selectable via rotational switches
- Impulse and break time separately adjustable
- Selectable start with impulse or break
- Voltage range AC/DC 12 ... 240 V
- Adjustment aid for quick setting of long time values
- Suitable for 2-wire proximity sensor control
- LED indicators for operation, contact position and time delay
- 2 changeover contacts
- Wire connection: also 2 x 1.5 mm² stranded ferruled, or 2 x 2.5 mm² solid DIN 46 228-1/-2/-3/-4
- As option 1 changeover contact instantaneously programmable
- As option connection of 2 remote potentiometers
- As option with time interruption / time adding input
- As option with pluggable terminal blocks for easy exchange of devices
  - with screw terminals
  - or with cage clamp terminals
- 22.5 mm width

### Function Diagram

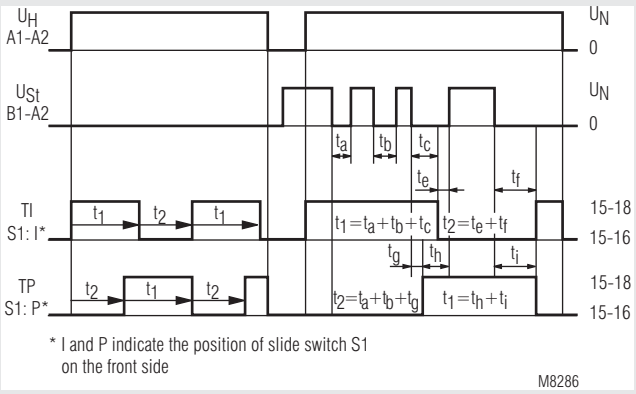


### Circuit Diagrams

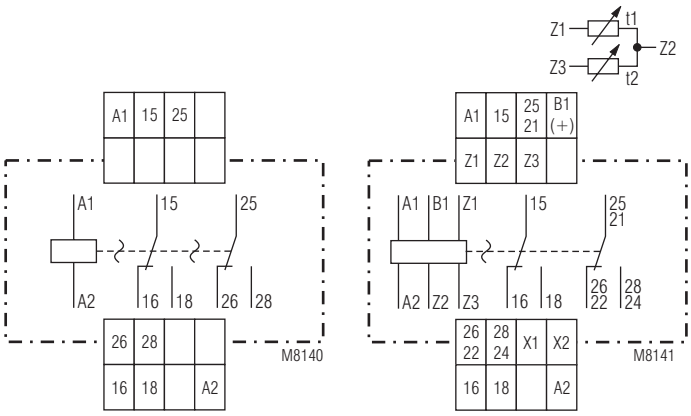


MK 7854N.82 MK 7854N.82/500

### Approvals and Markings

CE c UL us LISTED * Canada / USA

* see variants

### Application

Time-dependent controllers

### Indicators

| | |
|---|---|
| green LED: | on when voltage connected |
| yellow LED "R/t": | shows status of output relay and time delay: |
| -Flashing (short on, long off) | output relay not active; time delay t2 (break time) |
| -Flashing (long on, short off) | output relay active; time delay t1 (pulse time) |

### Connection Terminals

| Terminal designation | Signal description |
|---|---|
| A1 | L / + |
| A2 | N / - |
| 15, 16, 18 | Changeover contact |
| 25, 26, 28 | Changeover contact |
| B1(+) | Control Input (time interruption with time adding) |
| X1, X2 | Control Input (programming 2nd delayed C/O contact or instantaneous contact) |
| Z1, Z2, Z3 | Input to connect two remote potentiometer for time setting t1 and t2 |

## Notes

**Control of A1-A2 with proximity sensors**
The input can be controlled by DC 3 wire or AC/DC 2 wire proximity sensors. For operating voltage > 24 V and usage of sensors without built-in short circuit protection a protection resistor on A1 is recommendend to reduce the inrush current. The dimension is as follows:

$R_v \approx$ operating voltage / max. switching current of sensor

The series resistor must not be selected higher than necessary.
Max. values are:

| | | | | |
|---|---|---|---|---|
| Operating voltage: | 48 V | 60 V | 110 V | 230 V |
| Series resistor $R_v$ max: | 270 Ω | 390 Ω | 680 Ω | 1.8 kΩ (1 W) |

**Adjustment assistance**
The flashing period of the yellow LED is 1 s ± 4% and can be used to adjust the time. Especially on the lower end of scale and for long times it is suitable as the multiplication factors between the different time ranges are exact without tolerance.
Example:
The required time is 40 min. It has to be adjusted within the range 3 ... 300 min. The time check takes too long as several timing cycles would be necessary for a precise value.

For faster adjustment the setting is made to 0.03 ... 3 min. On this range the potentiometer should be set to 0.4 min. (= 24 sec). With the right potentiometer setting the LED must show 24 flashing cycles. After that the time range is switched over to 3 ... 300 min and the setting is complete.

**Time interruption / Time adding**
With the model MK 7854N.82/500 the timing cycle can be interrupted by controlling input B1 (+) with control voltage. Removing the control signal will continue the timing cycle (time addition). When time interrupted the yellow LED stops to flash and goes to continuous light during pulse time (output relay active), or goes off during break time (output relay inactive).

**Control input B1**
The control input B1 (+) has to be supplied with voltage against A2. The control signal could be the same as the auxiliary/control voltage of A1 or any other voltage between 12 and 240 V AC or DC. Operating a parallel load between B1 and A2 is possible, which allows cost saving circuits.

**Instantaneous contact**
By external wire lings the output function fo the variant MK 7854N.82/500 can be altered from 2 delayed contacts to 1 delayed **and** 1 instantaneous contact. The instantaneous contact switches when the operating voltage is connected.
To terminals X1 and X2 no other voltage potentials must be connected, as the unit might be damaged.
**Remote potentiometers**
With the variant MK 7854N.82/500 both time settings can also be made via remote potentiometers of 10 kOhms:
- Terminals Z1-Z2: potentiometer for pulse time (t1)
- Terminals Z2-Z3: potentiometer for break time (t2)

When connecting a remote potentiometer, the corresponding potentiometer has to be set to min. If no remote potentiometers are required the terminals Z1-Z2 resp. Z2-Z3 have to be linked.
The wires to the remote potentiometers should be installed separately from the lines with mains voltage. If this is not possible, a screened cable is recommendet where the shield is connected to Z2.
To terminals Z1, Z2 and Z3 no external voltage must be connected, as the unit might be damaged.

## Setting

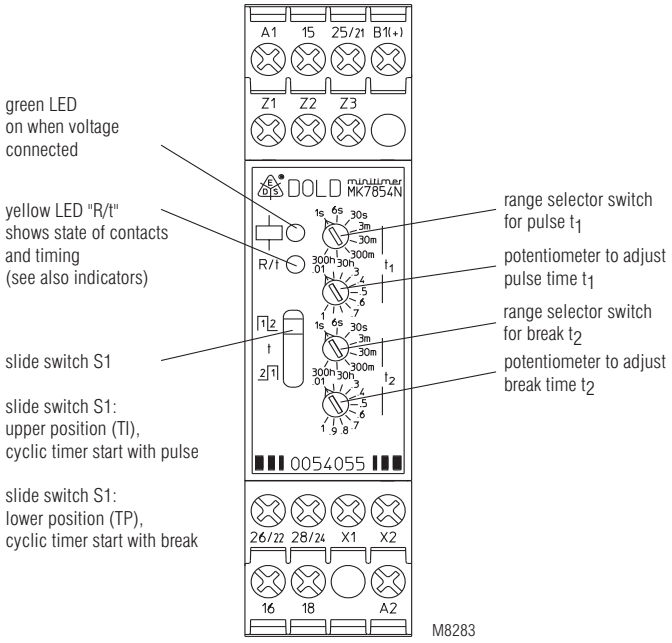


## Technical Data

**Time circuit**

| | |
|---|---|
| **Time ranges:** | 8 time ranges in one unit, settable via rotational switch<br>0.05 ... 1 s  0.3 ... 30 min<br>0.06 ... 6 s  3 ... 300 min<br>0.3 ... 30 s  0.3 ... 30 h<br>0.03 ... 3 min  3 ... 300 h |
| **Time setting t1, t2:** | continuous, 1:100 on relative scale |
| **Recovery time:** | |
| at DC 24 V: | approx. 15 ms |
| at DC 240 V: | approx. 50 ms |
| at AC 230 V: | approx. 80 ms |
| **Repeat accuracy:** | ± 0.5 % of selected end of scale value |
| **Voltage and temperature influence:** | < 1 % with the complete operating range |

**Input**

| | |
|---|---|
| **Nominal voltage $U_N$:** | AC/DC 12 ... 240 V |
| **Voltage range:** | 0.8 ... 1.1 $U_N$ |
| **Frequency range (AC):** | 45 ... 400 Hz |
| **Nominal consumption** | |
| at AC 12 V: | approx.1.5 VA |
| at AC 24 V: | approx. 2 VA |
| at AC 230 V: | approx. 3 VA |
| at DC 12 V: | approx.1 W |
| at DC 24 V: | approx. 1 W |
| at DC 230 V: | approx. 1 W |
| **Release voltage (A1/A2)** | |
| | Delayed contact |
| AC 50 Hz: | approx. 7.5 V |
| DC: | approx. 7 V |
| | Instantaneous contact |
| AC 50 Hz: | approx. 3 V |
| DC: | approx. 3.3 V |
| **Max. permitted residual current with 2-wire proximity sensor control (A1-A2)** | |
| up to AC/DC 150 V: | AC resp. DC 5 mA |
| up to AC/DC 264 V: | AC resp. DC 3 mA |
| **Control current (B1)** | |
| MK 7854N.82/500: | approx. 1 mA, over complete voltage range |
| **Release voltage (B1/A2)** | |
| AC 50 Hz: | approx. 3.5 V |
| DC: | approx. 3 V |

## Technical Data

**Output**

| | | |
|---|---|---|
| **Contacts:** | | |
| MK 7854N.82: | 2 changeover contacts | |
| MK 7854N.82/500: | 2 changeover contacts, one programmable as instantaneous contact | |
| without bridge X1-X2: | 25-26-28 delayed changeover contact | |
| with bridge X1-X2: | 21-22-24 instantaneous contact at $U_N$ on A1-A2 | |
| **Contact material:** | AgNi | |
| **Measured nominal voltage:** | AC 250 V | |
| **Thermal current $I_{th}$:** | see quadratic total current limit curve (max. 4 A per contact) | |
| **Switching capacity** | | |
| to AC 15 | | |
| NO contact: | 3 A / AC 230 V | IEC/EN 60 947-5-1 |
| NC contact: | 1 A / AC 230 V | IEC/EN 60 947-5-1 |
| to DC 13: | 1 A / DC 24 V | |
| **Electrical life** | | IEC/EN 60 947-5-1 |
| at AC 15 to 1 A, AC 230 V: | 1.5 x $10^5$ switching cycles | |
| **Permissible switching frequency:** | 36 000 switching cycles / h | |
| **Short circuit strength** | | |
| **max. fuse rating:** | 4 A gL | IEC/EN 60 947-5-1 |
| **Mechanical life:** | 30 x $10^6$ switching cycles | |

**General Data**

| | | |
|---|---|---|
| **Operating mode:** | Continuous operation | |
| **Temperature range** | | |
| Operation: | - 40 ... + 60 °C (higher temperature see quadratic total current limit curve) | |
| Storage: | - 40 ... + 70 °C | |
| **Relative air humidity:** | 93 % at 40 °C | |
| **Altitude:** | < 2,000 m | |
| **Clearance and creepage distances** | | |
| rated impulse voltage / pollution degree: | | |
| Input / Output: | 4 kV / 2 (basis insulation) | IEC 60 664-1 |
| Output / Output: | 4 kV / 2 (basis insulation) | IEC 60 664-1 |
| Overvoltage category: | III | |
| Insulation test voltage, type test: | 2.5 kV; 1 min | |
| **EMC** | | |
| Electrostatic discharge: | 8 kV (air) | IEC/EN 61 000-4-2 |
| HF irradiation | | |
| 80 MHz ... 1 GHz: | 20 V / m | IEC/EN 61 000-4-3 |
| 1 GHz ... 2.7 GHz: | 10 V / m | IEC/EN 61 000-4-3 |
| Fast transients: | 2 kV | IEC/EN 61 000-4-4 |
| Surge voltages between | | |
| wires for power supply: | 2 kV | IEC/EN 61 000-4-5 |
| between wire and ground: | 4 kV | IEC/EN 61 000-4-5 |
| HF-wire guided: | 10 V | IEC/EN 61 000-4-6 |
| Interference suppression: | Limit value class A*) *) The device is designed for the usage under industrial conditions (Class A, EN 55011). When connected to a low voltage public system (Class B, EN 55011) radio interference can be generated. To avoid this, appropriate measures have to be taken. | |
| **Degree of protection** | | |
| Housing: | IP 40 | IEC/EN 60 529 |
| Terminals: | IP 20 | IEC/EN 60 529 |
| **Housing:** | Thermoplasic with V0 behaviour according to UL subject 94 | |
| **Vibration resistance:** | Amplitude 0.35 mm, frequency 10 ... 55 Hz, IEC/EN 60 068-2-6 | |
| **Climate resistance:** | 20 / 060 / 04 | IEC/EN 60 068-1 |
| **Terminal designation:** | | EN 50 005 |

## Technical Data

| | | |
|---|---|---|
| **Wire connection** | | DIN 46 228-1/-2/-3/-4 |
| **Screw terminals (integrated):** | 1 x 4 $mm^2$ solid or<br>1 x 2.5 $mm^2$ stranded ferruled or<br>2 x 1.5 $mm^2$ stranded ferruled or<br>2 x 2.5 $mm^2$ solid | |
| Insulation of wires or sleeve length: | 8 mm | |
| **Plug in with screw terminals** | | |
| max. cross section for connection: | 1 x 2.5 $mm^2$ solid or<br>1 x 2.5 $mm^2$ stranded ferruled | |
| Insulation of wires or sleeve length: | 8 mm | |
| **Plug in with cage clamp terminals** | | |
| max. cross section for connection: | 1 x 4 $mm^2$ solid or<br>1 x 2.5 $mm^2$ stranded ferruled | |
| min. cross section for connection: | 0.5 $mm^2$ | |
| Insulation of wires or sleeve length: | 12 $^{\pm 0.5}$ mm | |
| **Wire fixing:** | Plus-minus terminal screws M 3.5 box terminals with wire protection or cage clamp terminals | |
| **Fixing torque:** | max. 0.8 Nm | |
| **Mounting:** | DIN rail | IEC/EN 60 715 |
| **Weight:** | 150 g | |

**Dimensions**

| | |
|---|---|
| **Width x heigth x depth:** | |
| MK 7854N: | 22.5 x 90 x 97 mm |
| MK 7854N PC: | 22.5 x 111 x 97 mm |
| MK 7854N PS: | 22.5 x 104 x 97 mm |

## UL-Data

| | |
|---|---|
| **Switching capacity:** | |
| Ambient temperature 60°C: | Pilot duty B300<br>5A 250Vac G.P. |
| **Wire connection:** | 60°C / 75°C copper conductors only |
| Screw terminals fixed: | AWG 20 - 12 Sol/Str Torque 0.8 Nm |
| Plug in screw: | AWG 20 - 14 Sol Torque 0.8 Nm<br>AWG 20 - 16 Str Torque 0.8 Nm |
| Plug in cage clamp: | AWG 20 - 12 Sol/Str |

**Technical data that is not stated in the UL-Data, can be found in the technical data section.**

## Standard Type

MK 7854N.82/61 AC/DC 12 ... 240 V 0.05 s ... 300 h

| | |
|---|---|
| Article number: | 0054053 |
| • Output: | 2 changeover contacts |
| • Nominal voltage $U_N$: | AC/DC 12 ... 240 V |
| • Time ranges: | 0.05 s ... 300 h |
| • Width: | 22.5 mm |

## Variant

MK 7854N.82/500/61:

- Connection facility for 2 remote potentiometers 10kOhms to adjust pulse and break time
- 2 changeover contacts, one programmable as instantaneous contact
- Additional control input B1 for time interruption / time addition

**Ordering example for variant**

MK 7854N .82 _ _ / _ _ _ /61 AC/DC 12 ... 240 V 0,05 s ... 300 h

- 0,05 s ... 300 h: Time range
- AC/DC 12 ... 240 V: Nominal voltage
- /61: with UL-approval
- _ _ _: Variant, if required
- _ _: Type of terminals
  without indication:
  terminal blocks fixed with screw terminals
  PC (plug in cage clamp):
  pluggable terminal blocks with cage clamp terminals
  PS (plug in screw):
  pluggable terminal blocks with screw terminals
- .82: Contacts
- MK 7854N: Type

## Options with Pluggable Terminal Blocks

Screw terminal
(PS/plugin screw)

Cage clamp
(PC/plugin cage clamp)

## Notes

Removing the terminal blocks with cage clamp terminals

1. The unit has to be disconnected.
2. Insert a screwdriver in the side recess of the front plate.
3. Turn the screwdriver to the right and left.
4. Please note that the terminal blocks have to be mounted on the belonging plug in terminations.

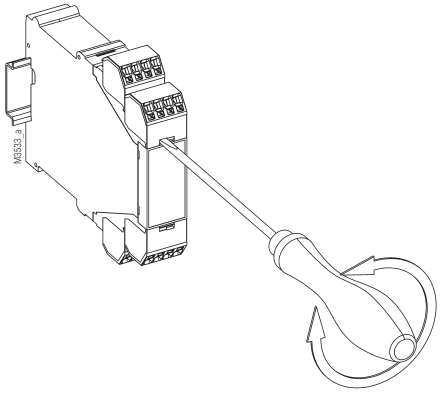


## Characteristics

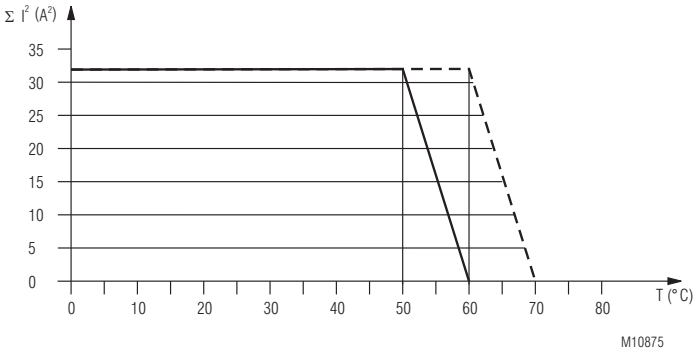


Quadratic total current limit curve

## Accessories

AD 3: External potentiometer 10 kΩ
Article number: 0028962

The external potentiometer is used for remote setting of the time delay. The internal potentiometer of the timer must be set to min. time delay.

Degree of protection front side: IP 60

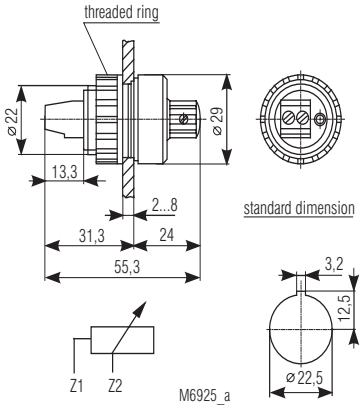

## Connection Examples

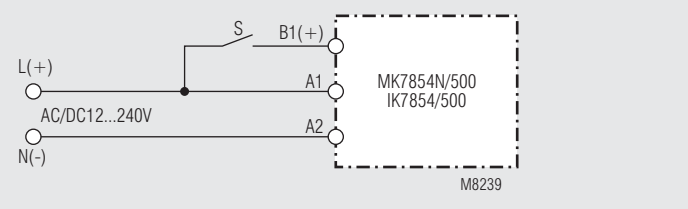


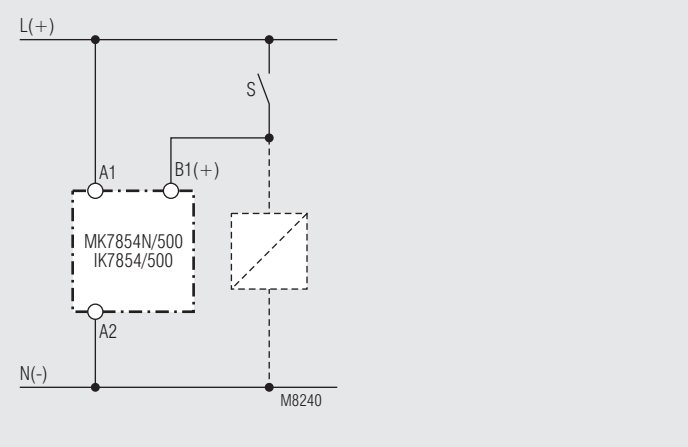


Control with parallel connected load

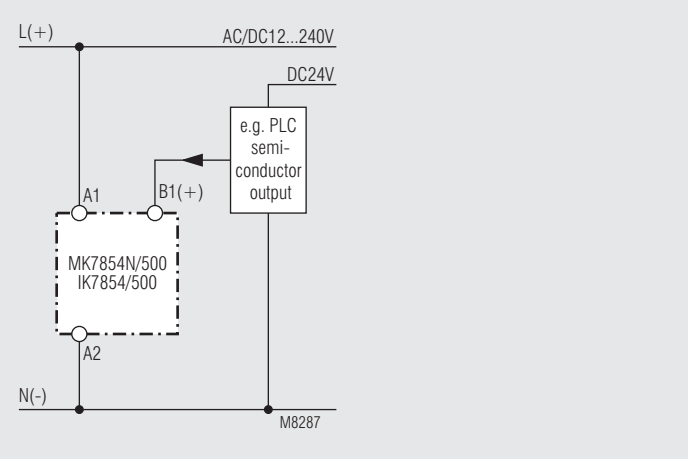


Connection with 2 different control voltages

# MINITIMER
## Pulse Control Timer
## BA 7864, EO 7864

0227773

BA 7864

EO 7864

EO 7864 with
front frame ET 4048-3

- According to IEC/EN 61 812-1
- Time range up to 32 h
- Seperate setting of impulse- and space time
- For impulse- and space time 4 time ranges each
- Repeat accuracy < ± 0.5 %
- Setting on relative scale
- Dual-voltage-version
- Programmable for start with impulse or space
- LED indication for operation and contact position
- BA 7864 available with remote potentiometer contact Z1-Z2, Z3-Z4
- EO 7864 with 11-pole socket
- Available with 1 or 2 changeover contacts, or semiconductor output (BA 7864)
- BA 7864: width 45 mm
  EO 7864: front size 35 x 48 mm

### Approvals and Markings

CE

### Application

Time dependent controls

### Indication

| | |
|---|---|
| red LED: | on when operating voltage applied |
| green LED: | on when output relay activated |

### Notes

By an external bridge via terminals 6-7 of the plug-in-socket the EO 7864 can be programmed for the start with space.

The BA 7864.- - starts with impulse, whereas the special version of the device BA 7864.- -/010 starts with space. For the variants BA 7864.81 and BA 7864.81/010 a remote setting of the impulse- or space time is possible via two external variable resistors.

### Function Diagram

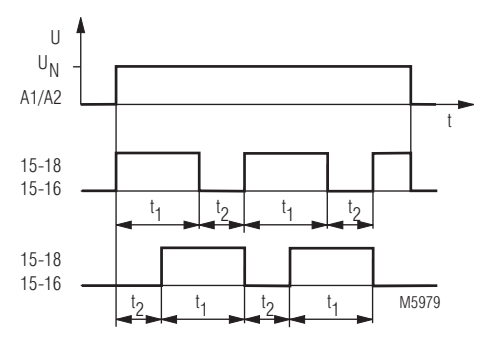

## Circuit Diagrams

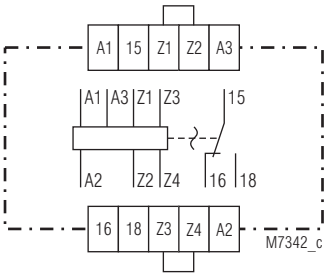


BA 7864.81

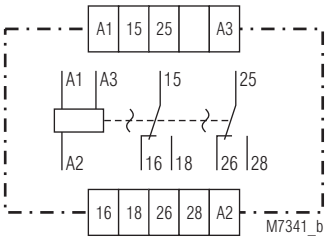


BA 7864.82

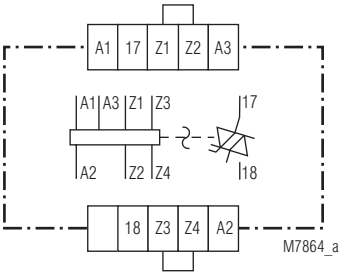


BA 7864.91

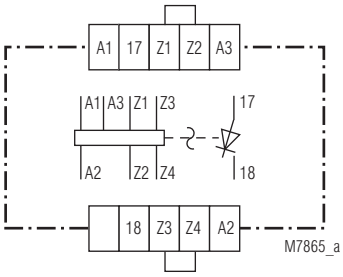


BA 7864.95

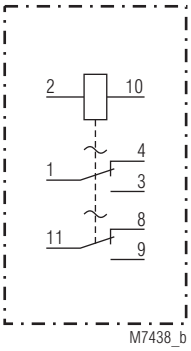


EO 7864.82
(single-voltage version)

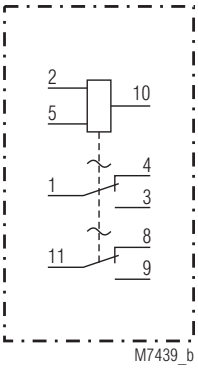


EO 7864.82
(dual-voltage version)

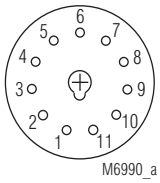


bottom view
looking on pins

## Technical Data

**Time circuit**

| | | | |
|---|---|---|---|
| **Time range:** | impulse and space seperately adjustable in 4 steps: | | |
| | 0.25 ... 2.5 s | or | 0.25 ... 2.5 min |
| | 1 ... 10 s | | 1 ... 10 min |
| | 8 ... 80 s | | 8 ... 80 min |
| | 64 ... 640 s | | 64 ... 640 min |
| | | or | 0.75 ... 7.5 min |
| | | | 3 ... 30 min |
| | | | 24 ... 240 min |
| | | | 3.2 ... 32 h |
| | other combinations of these time ranges for impulse or space, on demand. | | |
| **Time setting:** | for impulse and space seperately infinite on relative scale (1:10) | | |
| **Recovery time:** | < 30 ms | | |
| **Operate time:** | < 25 ms | | |
| **Release time:** | approx. 12 ms | | |
| **Remote setting** | | | |
| BA 7864.81: | AD 3 1 MΩ (2 pieces, for impulse- and space time) | | |
| **Repeat accuracy:** | < ± 0.5 % of the scale max. value | | |
| **Voltage influence:** | < 1 % over the whole voltage range | | |
| **Temperature range:** | < 0.1 % / K | | |

**Input**

| | |
|---|---|
| **Nominal voltage $U_N$:** | AC/DC 24, 42 V<br>AC/DC 24[1)] + AC 110 ... 127 V[2)]<br>AC/DC 24[1)] + AC 220 ... 240 V[2)]<br>[1)] to terminals A3-A2 or terminals 5-10<br>[2)] to terminals A1-A2 or terminals 2-10 |

## Technical Data

| | | |
|---|---|---|
| **Voltage range** | | |
| AC/DC 24 V and AC/DC 42 V: | AC and DC (residual ripple ≤ 20 %)<br>0.8 ... 1.2 $U_N$<br>DC (residual ripple = 48 %)<br>0.8 ... 1.1 $U_N$ | |
| AC 110 ... 127 V and<br>AC 220 ... 240 V: | 0.8 ... 1.1 $U_N$ | |
| **Nominal consumption:** | AC 24 V | 0.7 VA |
| | AC 42 V | 1.2 VA |
| | AC 110 V | 2.5 VA |
| | AC 230 V | 5 VA |
| | DC 24 V | 0.6 W |
| | DC 42 V | 1.2 W |
| **Nominal frequency:** | 50 / 60 Hz | |

**Relay Output**

| | | |
|---|---|---|
| **Contacts** | | |
| BA 7864.81: | 1 changeover contact | |
| BA 7864.82: | 2 changeover contacts | |
| EO 7864.81: | 1 changeover contact | |
| EO 7864.82: | 2 changeover contacts | |
| **Thermal current $I_{th}$:** | 5 A | |
| **Switching capacity** | | |
| to AC 15: | 5 A / AC 230 V | IEC/EN 60 947-5-1 |
| **Electrical life** | | IEC/EN 60 947-5-1 |
| to AC 15 at 3 A, AC 230 V: | 1.5 x $10^5$ switching cycles | |
| **Short circuit strength** | | |
| **max. fuse rating:** | 5 A gL | IEC/EN 60 947-5-1 |
| **Mechanical life:** | > 30 x $10^6$ switching cycles | |

**Solid state output**

| | |
|---|---|
| **BA 7864.91:** | Triac |
| Switching voltage: | AC 12 ... 275 V |
| Switching current: | 4 A |
| **BA 7864.95:** | Transistor |
| Switching voltage: | DC 15 ... 30 V |
| Switching current: | 5 A |

**General Data**

| | | |
|---|---|---|
| **Operating mode:** | Continuous operation | |
| **Temperature range:** | - 20 ... + 60 °C | |
| **Clearance and creepage distances** | | |
| rated impulse voltage / pollution degree: | 4 kV / 2 | IEC 60 664-1 |
| **EMC** | | |
| Electrostatic discharge: | 8 kV (air) | IEC/EN 61 000-4-2 |
| HF irradiation: | 10 V/m | IEC/EN 61 000-4-3 |
| Fast transients: | 2 kV | IEC/EN 61 000-4-4 |
| Surge voltages: | 1 kV | IEC/EN 61 000-4-5 |
| Interference suppression: | Limit value class B | EN 55 011 |
| **Degree of protection** | | |
| Housing: | IP 40 | IEC/EN 60 529 |
| Terminals: | IP 20 | IEC/EN 60 529 |
| **Housing:** | Thermoplast with V0-behaviour according to UL subject 94 | |
| **Vibration resistance:** | Amplitude 0.35 mm frequency 10...55Hz, IEC/EN 60 068-2-6 | |
| **Climate resistance:** | 20 / 060 / 04 | IEC/EN 60 068-1 |
| **Wire connection:** | | |
| BA 7864: | 2 x 2.5 $mm^2$ solid or<br>2 x 1.5 $mm^2$ stranded wire with sleeve DIN 46 228-1/-2/-3/-4 | |
| EO 7864: | via plug-in-socket suitable to the 11-pole socket according to IEC 67-1-18 a | |
| **Wire fixing:** | Flat terminals with self-lifting clamping piece | IEC/EN 60 999-1 |
| **Weight** | | |
| BA 7864: | 200 g | |
| EO 7864: | 110 g | |

## Technical Data

### Dimensions

**Width x height x depth**

| | |
|---|---|
| BA 7864: | 45 x 73 x 133 mm |
| EO 7864: | 35 x 48 x 109 mm |
| Front-panel cut-out | |
| EO 7864: | $45^{+0.6}$ x $45^{+0.6}$ mm |

## Standard Types

BA 7864.81 AC/DC 24 V + AC 220 ... 240 V 640 s On / 640 s Off

| | | |
|---|---|---|
| Article number: | 0032194 | stock item |
| • Output: | 1 changeover contact | |
| • Nominal voltage $U_N$: | AC/DC 24 V + AC 220 ... 240 V | |
| • Time setting for impulse and space: | 0.25 ... 640 s | |
| • Width: | 45 mm | |

EO 7864.82 AC/DC 24 V + AC 220 ... 240 V 640 m On / 640 m Off

| | | |
|---|---|---|
| Article number: | 0032222 | stock item |
| • Output: | 2 changeover contacts | |
| • Nominal voltage $U_N$: | AC/DC 24 V + AC 220 ... 240 V | |
| • Time setting for impulse and space: | 0.25 ... 640 m | |
| • Front size: | 35 x 48 mm | |

## Variants

| | |
|---|---|
| BA 7864. _ _ /010: | start with space |
| BA 7864.81/100: | programmable, start with space, when X3, X4 bridged |

### Ordering examples for variants

BA 7864 .81 /_ _ _ AC/DC24V 50/60Hz 640s/640s

- 640s/640s: Time range max. value, impulse/space
- 50/60Hz: Nominal frequency
- AC/DC24V: Nominal voltage
- /_ _ _: Variant, if required
- .81: Contacts
- BA 7864: Type

BA 7864 .95 5A AC/DC24V+AC220...240V 50/60Hz 640s/640s

- 640s/640s: Time range max. value, impulse/space
- 50/60Hz: Nominal frequency
- AC/DC24V+AC220...240V: Nominal voltage
- 5A: Switching output
- .95: Contacts
- BA 7864: Type

## Accessories

for BA 7864.81:

| | |
|---|---|
| AD 3: | External variable resistor 1 MΩ<br>Article number: 0028962 |
| Degree of protection front side: | IP 60 |

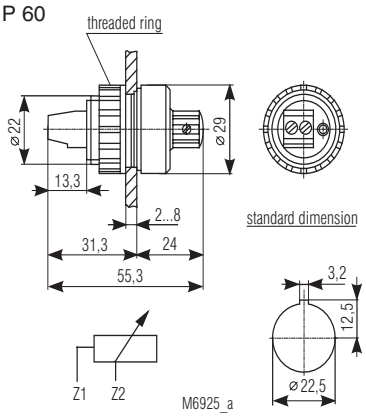


for EO-version:
for DIN rail mounting:

| | |
|---|---|
| ET 4048-21: | plug-in socket without fixing clamp<br>Article number: 0028049 |
| ET 4048-22: | plug-in socket with fixing clamp<br>Article number: 0028050 |

for flush mounting:

| | |
|---|---|
| ET 4048-13: | plug-in adapter<br>Article number: 0010784 |
| ET 4048-3: | front frame<br>Article number: 0004979 |

# MINITIMER
## Time Relay With Operate Delay
## IK 7813, SK 7813

0222111

IK 7813

SK 7813

- According to IEC/EN 61 812-1
- 1 changeover contact
- Delay up to 60 min.
- Repeat accuracy ≤ 1 %
- LED indicator for contact position
- Devices available in 2 enclosure versions:
  IK 7813: depth 58 mm, with terminals at the bottom for installation systems and industrial distribution systems according to DIN 43 880
  SK 7813: depth 98 mm, with terminals at the top for cabinets with mounting plate and cable ducts
- Width 17.5 mm

### Function Diagram

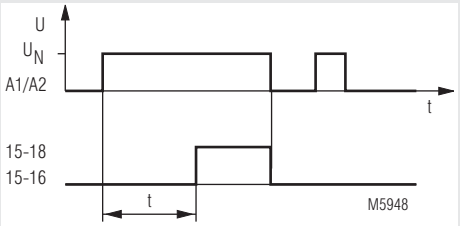


### Circuit Diagram

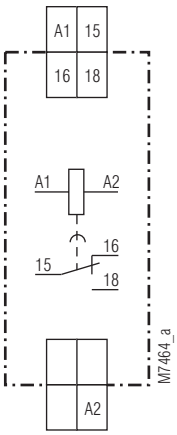


### Connection Terminals

| Terminal designation | Signal description |
|---|---|
| A1 | L / + |
| A2 | N / - |
| 15, 16, 18 | Changeover contact |

### Approvals and Markings

CE

### Application

Time-based control equipment

### Indicator

LED: on when the output relay is activated (contact 15 - 18 is closed)

### Notes

A change of the time setting is directly valid.
If a time is changed during time elaps, the output relay may energise unintended.

## Technical Data

**Time circuit**

| | | |
|---|---|---|
| **Time ranges:** | 0,1 ... 1 s | 1 ... 10 min |
| | 0,3 ... 3 s | 3 ... 30 min |
| | 1 ... 10 s | 6 ... 60 min |
| | 3 ... 30 s | |
| | 10 ... 100 s | |
| **Time setting:** | Infinitely variable, on relative scale | |
| **Recovery time** | | |
| tw 50 / 100: | < 60 ms | |
| **Repeat accuracy:** | 0.1 % | |
| **Voltage influence:** | ≤ 1 % at 0.8 ... 1.1 $U_N$ | |
| **Temperature influence:** | 0.05 % / K | |

**Input**

| | | |
|---|---|---|
| **Nominal voltage $U_N$:** | AC/DC 12 V, AC/DC 24 V, AC 110 ... 127 V, AC 220 ... 240 V | |
| **Voltage range:** | 0.8 ... 1.1 $U_N$ with AC and DC 48 % residual ripple | |
| | 0.9 ... 1.25 $U_N$ in battery operating mode | |
| **Release voltage:** | 15 % $U_N$ | |
| **Nominal consumption:** | AC/DC 24 V | 0.6 W |
| | AC 230 V 50 Hz | 3.5 VA |
| **Nominal frequency:** | 50 / 60 Hz | |
| **Frequency range:** | ± 5 % | |

**Output**

| | | |
|---|---|---|
| **Contacts:** | 1 changeover contact | |
| **Contact material:** | $AgSnO_2$ | |
| **Measured nominal voltage:** | AC 250 V | |
| **Release time of the contacts:** | < 20 ms | |
| **Thermal current $I_{th}$:** | max. 10 A (see quadratic total current limit curve) | |
| **Switching capacity** | | |
| to AC 15 | | |
| NO contact: | 10 A / AC 230 V | IEC/EN 60 947-5-1 |
| NC contact: | 5 A / AC 230 V | IEC/EN 60 947-5-1 |
| **Glow lamp load:** | 1200 W | |
| **Electrical life:** | | IEC/EN 60 947-5-1 |
| to AC 15 at 3 A, AC 230 V: | 5 x $10^5$ switching cycles | |
| **Permissible switching frequency:** | 6000 switching cycles/h | |
| **Short circuit strength** | | |
| max. fuse rating: | 10 AgL | IEC/EN 60 947-5-1 |
| max. line circuit breaker: | B16 | |
| **Mechanical life:** | > 30 x $10^6$ switching cycles | |

**General Data**

| | | |
|---|---|---|
| **Operating mode:** | Continuous operation | |
| **Temperature range:** | | |
| Operation: | - 20 ... + 60°C | |
| Storage: | - 25 ... + 70°C | |
| **Relative air humidity:** | 95 % at 40 °C | |
| **Altitude:** | < 2.000 m | |
| **Clearance and creepage distances** | | |
| rated impulse voltage/ pollution degree: | 4 kV / 2 (base insulation) | IEC 60 664-1 |
| Overvoltage category: | III | |
| Insulation test voltage, type test: | 2.5 kV; 1 min | |
| **EMC** | | |
| Electrostatic discharge: | 8 kV (air) | IEC/EN 61 000-4-2 |
| HF irradiation: | | |
| 80 MHz ... 1 GHz: | 12 V / m | IEC/EN 61 000-4-3 |
| 1 GHz ... 2.7 GHz: | 10 V / m | IEC/EN 61 000-4-3 |
| Fast transients: | 4 kV | IEC/EN 61 000-4-4 |
| Surge voltage between | | |
| wires for power supply: | 2 kV | IEC/EN 61 000-4-5 |
| between wire and ground: | 4 kV | IEC/EN 61 000-4-5 |
| HF-wire guided: | 20 V | IEC/EN 61 000-4-6 |
| Interference suppression: | Limit value class B | EN 55 011 |
| **Degree of protection** | | |
| Housing: | IP 40 | IEC/EN 60 529 |
| Terminals: | IP 20 | IEC/EN 60 529 |

## Technical Data

| | | |
|---|---|---|
| **Housing:** | Thermoplastic with V0 behaviour according to UL Subj. 94 | |
| **Vibration resistance:** | Amplitude 0.35 mm frequency 10 ... 55 Hz | IEC/EN 60 068-2-6 |
| **Climate resistance:** | 20 / 060 / 04 | IEC/EN 60 068-1 |
| **Terminal designation:** | EN 50 005 | |
| **Wire connection:** | | DIN 46 228-1/-2/-3/-4 |
| Cross section: | 2 x 2,5 $mm^2$ solid or 2 x 1,5 $mm^2$ stranded ferruled | |
| Stripping length: | 10 mm | |
| **Wire fixing:** | Flat terminals with self-lifting clamping piece | IEC/EN 60 999-1 |
| **Fixing torque:** | 0.8 Nm | IEC/EN 60 999-1 |
| **Mounting:** | DIN rail | IEC/EN 60 715 |
| **Weight:** | | |
| IK 7813: | 75 g | |
| SK 7813: | 94 g | |

**Dimensions**

| | |
|---|---|
| **Width x height x depth:** | |
| IK 7813: | 17.5 x 90 x 58 mm |
| SK 7813: | 17.5 x 90 x 98 mm |

## Standard Type

IK 7813.81 AC 220 ... 240 V 0.1 ... 1 s

| | |
|---|---|
| Article number: | 0033628 |
| • Output: | 1 changeover contact |
| • Nominal voltage $U_N$: | AC 220 ... 240 V |
| • Time range: | 0.1 ... 1 s |
| • Width: | 17.5 mm |

SK 7813.81 AC 220 ... 240 V 0.1 ... 1 s

| | |
|---|---|
| Article number: | 0054738 |
| • Output: | 1 changeover contact |
| • Nominal voltage $U_N$: | AC 220 ... 240 V |
| • Time range: | 0.1 ... 1 s |
| • Width: | 17.5 mm |

## Variant

| | |
|---|---|
| IK 7813.81/107: | with a time of 5 s or 0.4 s to be used in 3-phase voltage systems changeover control |

**Ordering example for variant**

IK 7813 .81 /_ _ _ AC 220 ... 240 V 1 ... 10 s

- 1 ... 10 s — Time range
- AC 220 ... 240 V — Nominal voltage
- /_ _ _ — Variant, if required
- .81 — Contacts
- IK 7813 — Type

## Characteristic

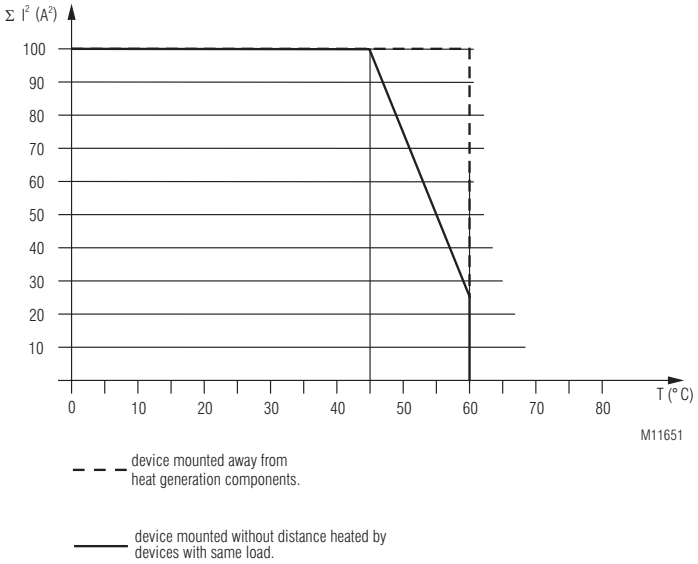


Quadratic total current limit curve

## Connection Example

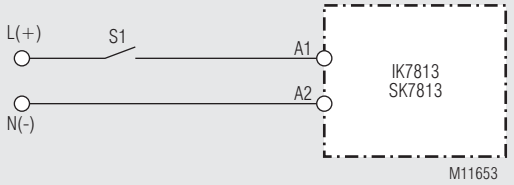

# MINITIMER
## Time Relay With Operate Delay
## IK 7814, SK 7814

- According to IEC/EN 61 812-1
- 4 time ranges up to 640 min.
- Repeat accuracy ≤ 1 %
- LED indicator for contact position
- 1 changeover contact
- Devices available in 2 enclosure versions:
  IK 7814: depth 58 mm, with terminals at the bottom for installation systems and industrial distribution systems according to DIN 43 880
  SK 7814: depth 98 mm, with terminals at the top for cabinets with mounting plate and cable ducts
- Width 17.5 mm

### Function Diagram

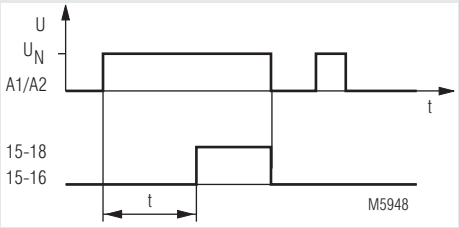


### Approvals and Markings

CE

### Application

Time-based control equipment

### Circuit Diagram

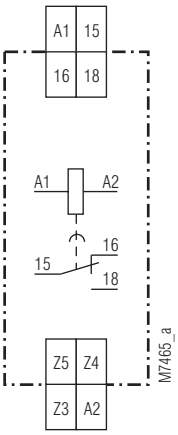


### Indicator

| | |
|---|---|
| LED: | on when the output relay is activated (contact 15 - 18 is closed) |

### Notes

A change of the time setting is directly valid.
If a time is changed during time elaps, the output relay may energise unintended.

The terminals Z3, Z4, Z5 are not galvanically separated to the terminals A1/A2!

### Connection Terminals

| Terminal designation | Signal description |
|---|---|
| A1 | L / + |
| A2 | N / - |
| Z3, Z4, Z5 | Control inputs for programming of the time ranges |
| 15, 16, 18 | Changeover contact |

## Technical Data

### Time circuit

**Time ranges:** 4 time ranges can be programmed externally via the terminals Z3 - Z4 - Z5

| Bridge Z3 Z4 Z5 | Unit with second ranges | Unit with minute ranges |
|---|---|---|
| 0 0—0 | 0.25 - 2.5 s | 0.25 - 2.5 min |
| 0———0 | 1 - 10 s | 1 - 10 min |
| 0—0—0 | 8 - 80 s | 8 - 80 min |
| 0 0 0 | 64 - 640 s | 6 - 640 min |

**Time setting:** Infinitely variable, on relative scale
**Recovery time**
tw 50 / 100: < 60 ms
**Repeat accuracy:** 0.1 %
**Voltage influence:** ≤ 1 % at 0.8 ... 1.1 $U_N$
**Temperature influence:** 0.05 % / K

### Input

**Nominal voltage $U_N$:** AC/DC 12 V, AC/DC 24 V, AC 110 ... 127 V, AC 220 ... 240 V
**Voltage range:** 0.8 ... 1.1 $U_N$ with AC and DC 48 % residual ripple
0.9 ... 1.25 $U_N$ in battery operating mode
**Release voltage:** 15 % $U_N$
**Nominal consumption:** AC/DC 24 V 0.6 W
AC 230 V 50 Hz 3.5 VA
AC 240 V 50 Hz 4 VA
**Nominal frequency:** 50 / 60 Hz
**Frequency range:** ± 5 %

### Output

**Contacts:** 1 changeover contact
**Contact material:** $AgSnO_2$
**Measured nominal voltage:** AC 250 V
**Thermal current $I_{th}$:** max. 10 A
(see quadratic total current limit curve)

**Switching capacity**
at AC 15
NO contact: 10 A / AC 230 V IEC/EN 60 947-5-1
NC contact: 5 A / AC 230 V IEC/EN 60 947-5-1
**Glow lamp load:** 1200 W
**Electrical life:** IEC/EN 60 947-5-1
AC 15 at 3 A, AC 230 V: 5 x $10^5$ switching cycles
**Permissible switching frequency:** 6 000 switching cycles/h
**Short circuit strength**
max. fuse rating: 10 AgL IEC/EN 60 947-5-1
max. line circuit breaker: B16
**Mechanical life:** > 30 x $10^6$ switching cycles

### General Data

**Nominal operating mode:** Continuous operation
**Temperature range:**
Operation: - 20 ... + 60°C
Storage: - 25 ... + 70°C
**Relative air humidity:** 95 % at 40 °C
**Altitude:** < 2.000 m
**Clearance and creepage distances**
Rated impulse voltage/ pollution degree: 4 kV / 2 (base insulation) IEC 60 664-1
Overvoltage category: III
Insulation test voltage, type test: 2.5 kV; 1 min
**EMC**
Electrostatic discharge: 8 kV (air) IEC/EN 61 000-4-3
HF irradiation
80 MHz ... 1 GHz: 10 V / m IEC/EN 61 000-4-3
1 GHz ... 2.5 GHz: 3 V / m IEC/EN 61 000-4-3
2.5 GHz ... 2.7 GHz: 1 V / m IEC/EN 61 000-4-3
Fast transients: 4 kV IEC/EN 61 000-4-4
Surge voltages:
between
wires for power supply: 2 kV IEC/EN 61 000-4-5
between wire and ground: 4 kV IEC/EN 61 000-4-5
HF-wire guided: 20 V IEC/EN 61 000-4-6
Interference suppression: Limit value class B EN 55 011

## Technical Data

**Degree of protection**
Housing: IP 40 IEC/EN 60 529
Terminals: IP 20 IEC/EN 60 529
**Housing:** Thermoplastic with V0 behaviour according to UL Subj. 94
**Vibration resistance:** Amplitude 0.35 mm frequency 10 ... 55 Hz, IEC/EN 60 068-2-6
**Climate resistance:** 20 / 060 / 04 IEC/EN 60 068-1
**Terminal designation:** EN 50 005
**Wire connection:** DIN 46 228-1/-2/-3/-4
Cross section: 2 x 2,5 mm² solid or
2 x 1,5 mm² stranded ferruled
Stripping length: 10 mm
**Wire fixing:** Flat terminals with self-lifting clamping piece IEC/EN 60 999-1
**Fixing torque:** 0.8 Nm IEC/EN 60 999-1
**Mounting:** DIN rail IEC/EN 60 715
**Weight**
IK 7814: 75 g
SK 7814: 94 g

### Dimensions

**Width x height x depth:**
IK 7814: 17.5 x 90 x 58 mm
SK 7814: 17.5 x 90 x 98 mm

### Standard type

IK 7814.81 AC 220 ... 240 V 0.25 ... 640 s
Article number: 0031959
- Output: 1 changeover contact
- Nominal voltage $U_N$: AC 220 ... 240 V
- Time range: 0.25 ... 640 s
- Width: 17.5 mm

SK 7814.81 AC 220 ... 240 V 0.25 ... 640 s
Article number: 0054739
- Output 1 changeover contact
- Nominal voltage $U_N$: AC 220 ... 240 V
- Time range: 0.25 ... 640 s
- Width: 17.5 mm

### Variante

IK 7814.81/107: to be used in 3-phase voltage systems changeover control

**Ordering example for variant**

IK 7814 .81 /_ _ _ AC 220 ... 240 V 0.25 ... 640 s

- 0.25 ... 640 s — Time range
- AC 220 ... 240 V — Nominal voltage
- /_ _ _ — Variant, if required
- .81 — Contacts
- IK 7814 — Type

## Characteristic

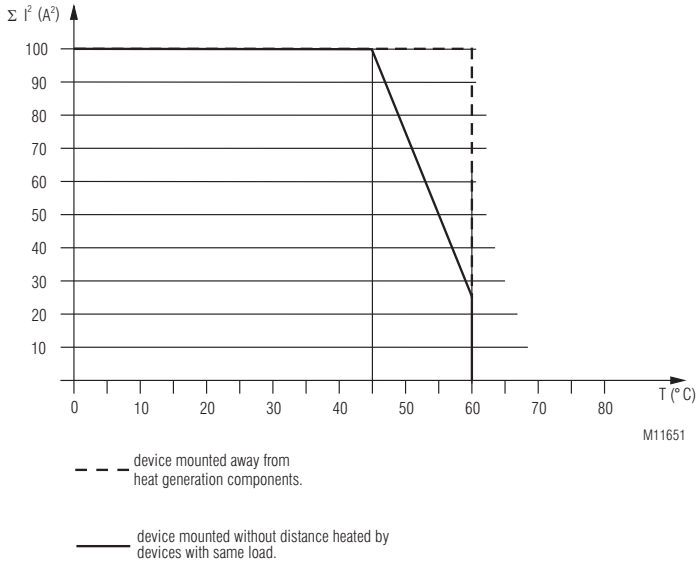


Quadratic total current limit curve

## Connection Example

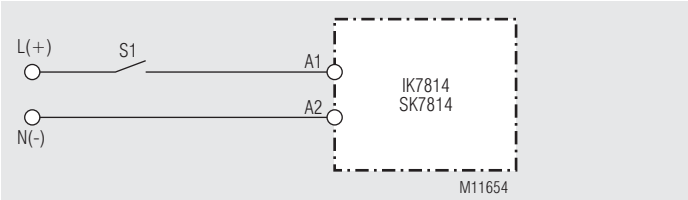

# MINITIMER
## Time Delay Relay, Operate Delay Type
## IK 7825

- According to IEC/EN 61 812-1
- Delay of 0.05 s ... 60 min.
- Repeat accuracy ≤ 0.5 % + 10 ms
- Pushbutton for manual actuation of the contact
- 1 or 2 changeover contacts for 16 A
- Width 17.5 mm

### Function Diagram

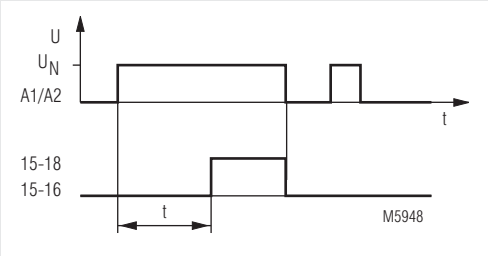


### Circuit Diagrams

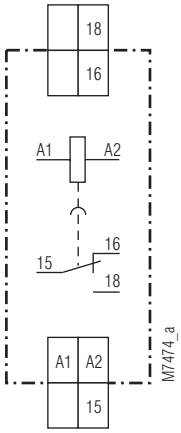


IK 7825.81

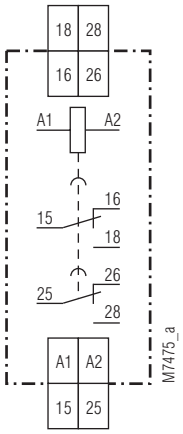


IK 7825.82

### Approvals and Markings

CE

### Applications

- Time-dependent controllers

### Indicators

| | |
|---|---|
| Push button: | pressed, when relay energized |

### Technical Data

| | |
|---|---|
| **Time ranges:** | 0.05 ... 1 s |
| | 0.5 ... 10 s |
| | 5 ... 100 s |
| | 0.5 ... 10 min. |
| | 1.5 ... 30 min. |
| | 3 ... 60 min. |
| **Tolerance of end value:** | - 5 ... + 25 % of nominal value |
| **Time setting:** | steppless, 1:20 on relative scale |
| **Recovery time:** | approx. 60 ms (after time run-down) |
| | approx. 700 ms (during time run-down) |
| **Repeat accuracy:** | < ± 0.5 % + 10 ms |
| **Voltage influence:** | < 1 % over voltage range |
| **Temperature influence:** | < 0.1 % / K |

#### Input

| | |
|---|---|
| **Nominal voltage $U_N$:** | AC 24, 127, 230 V |
| | DC 24 V |
| **Voltage range:** | 90 ... 110 % $U_N$ |
| **Nominal consumption** | |
| AC: | 2.3 VA |
| DC: | 1.5 W |
| **Nominal frequency:** | 50 Hz |
| **Frequency range:** | ± 5 % |

#### Output

| | |
|---|---|
| **Contacts** | |
| IK 7825.81: | 1 changeover contact delayed |
| IK 7825.82: | 2 changeover contacts delayed |
| **Release time of the contacts:** | < 30 ms |
| **Thermal current $I_{th}$:** | 16 A |
| **Electrical life** | at 500 switching cycles / h |
| under ohmic load AC 230 V: | 6 A 150 x $10^4$ switching cycles |
| | 10 A 72 x $10^4$ switching cycles |
| | 16 A 12 x $10^4$ switching cycles |
| **Inductive load cos. φ 0.6:** | 10 A 10 x $10^4$ switching cycles |
| **Direct current load:** | see limti curve for arc-free operation |
| **Short circuit strength** | |
| **max. fuse rating:** | 16 A gL |
| **Mechanical life:** | > 3 x $10^6$ switching cycles |
| **General Data** | |

## Technical Data

| | | |
|---|---|---|
| **Operating mode:** | Continuous operation | |
| **Temperature range:** | - 20 ... + 45 °C | |
| **Clearance and creepage distances** | | |
| rated impulse voltage / pollution degree: | 4 kV / 3 | IEC 60 664-1 |
| **EMC** | | |
| Electrostatic discharge: | 8 kV (air) | IEC/EN 61 000-4-2 |
| HF irradiation: | 10 V / m | IEC/EN 61 000-4-3 |
| Fast transients: | 4 kV | IEC/EN 61 000-4-4 |
| Surge voltages between | | |
| wires for power supply: | 2 kV | IEC/EN 61 000-4-5 |
| between wire and ground: | 4 kV | IEC/EN 61 000-4-5 |
| Interference suppression: | Limit value class B | EN 55 011 |
| **Degree of protection** | | |
| Housing: | IP 40 | IEC/EN 60 529 |
| Terminals: | IP 20 | IEC/EN 60 529 |
| **Housing:** | Thermplastic with V0 behaviour according to UL subject 94 | |
| **Vibration resistance:** | Amplitude 0.35 mm, frequency 10 ... 55 Hz | IEC/EN 60 068-2-6 |
| **Climate resistance:** | 20 / 045 / 04 | IEC/EN 60 068-1 |
| **Terminal designation:** | EN 50 005 | |
| **Wire connection:** | 2 x 2.5 mm² solid or<br>2 x 1.5 mm² stranded ferruled<br>DIN 46 228-1/-2/-3/-4 | |
| **Wire fixing:** | Flat terminals with self-lifting clamping piece | IEC/EN 60 999-1 |
| **Mounting:** | DIN rail | IEC/EN 60 715 |
| **Weight:** | 100 g | |

### Dimensions

| | |
|---|---|
| **Width x height x depth:** | 17.5 x 89 x 58 mm |

## Standard Type

IK 7825.81 AC 230 V 50 Hz 5 ... 100 s

| | | |
|---|---|---|
| Article number: | 0043326 | stock item |
| • Output: | 1 changeover contact delayed | |
| • Nominal voltage $U_N$: | AC 230 V | |
| • Time range: | 5 ... 100 s | |
| • Width: | 17.5 mm | |

## Ordering Example

IK 7825 .81 AC 230 V 50 Hz 1 s

- 1 s — Time range limit value
- 50 Hz — Nominal frequency
- AC 230 V — Nominal voltage
- .81 — Contact
- IK 7825 — Type

## Characteristics

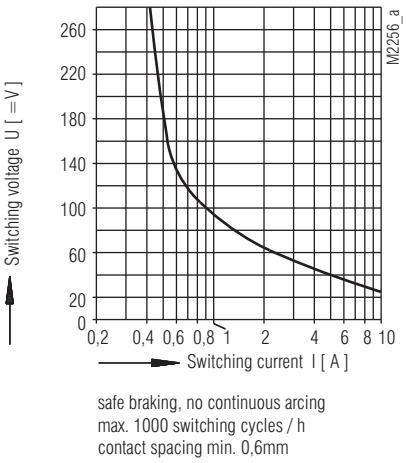


Limit curve for arc-free operation

# MINITIMER
## Time Relay, With Operate Delay
## IK 8808

0221569

- For two-wire technology
- According to IEC/EN 61 812-1
- programmable time ranges between 0.06 ... 160 s or 0.06 ... 160 min
- Programmable nominal voltage AC/DC 24 ... 240 V
- Repeat accuracy ≤ ± 1 %
- Thyristor output for 10 ... 800 mA
- Width 17.5 mm

### Function Diagram

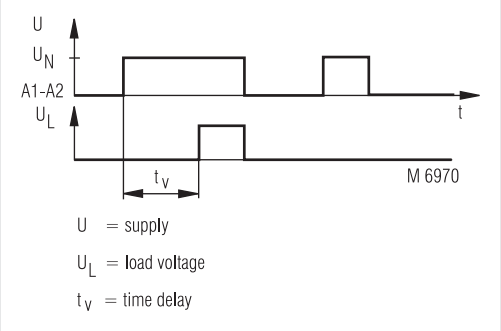


### Unit Programming

| Terminals | Bridge | Time sec/min | Voltage AC/DC [V] |
|---|---|---|---|
| 5 - 6<br>7 - 8 | | 16 ... 160 | |
| 5 - 6<br>7 - 8 | X<br>X | 2 ... 20 | |
| 5 - 6<br>7 - 8 | X | 0.25 ... 2.5 | |
| 5 - 6<br>7 - 8 | X | 0.06 ... 0.6 | |
| 3 - 4 | X | | 24 ... 60 |
| 3 - 4 | | | 60 ... 240 |

### Circuit Diagram

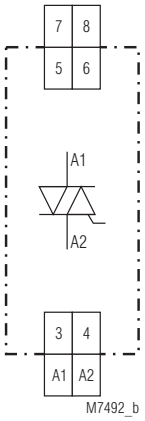


### Approvals and Markings

CE

### Application

Time-based control equipment

### Notes

The units must be connected in accordance with the connection examples. Voltage may not be applied to the time relay when it is not loaded; if this is done, the time relay will be destroyed. Connections A1 and A2 have advance pole protection.

### Technical Data

**Time circuit**

| | | |
|---|---|---|
| **Time ranges:** | 0.06 ... 0.6 s or | 0.06 ... 0.6 min |
| | 0.25 ... 2.5 s | 0.25 ... 2.5 min |
| | 2 ... 20 s | 2 ... 20 min |
| | 16 ... 160 s | 16 ... 160 min |
| **Time setting:** | Infinitely variable, on relative scale | |
| **Recovery time** | | |
| tw 50 / 100: | ≤ 100 ms / ≤ 25 ms | |
| **Repeat accuracy:** | ± 1 % of the full scale | |
| **Temperature influence:** | ≤ 0.15 % / K | |

**Input**

| | |
|---|---|
| **Nominal voltage $U_N$:** | AC/DC 24 ... 60 V and AC/DC 60 ... 240 V |
| **Voltage range:** | 0.8 ... 1.1 $U_N$ |
| **Nominal frequency:** | 50 / 60 Hz |
| **Frequency range:** | ± 20 % |
| **Residual current:** | ≤ 3 mA during the operating time |
| **Voltage drop:** | ≤ 3.5 V after the operating time has ended |

**Output**

| | |
|---|---|
| **Type of output:** | Thyristor |
| **Load current (min.):** | 10 mA |
| **Load current (max.):** | 0.8 A (20°C) |
| **Load current reduction:** | 10 mA |
| **Max. overload:** | 25 A max. 10 ms<br>50 A max. 1 ms |
| **Dielectric strength:** | 1 400 V max. 100 µs |
| **Thermal current $I_{th}$:** | 0.8 A |

## Technical Data

### General Data

| | | |
|---|---|---|
| **Nominal operating mode:** | Continuous operation | |
| **Temperature range:** | - 20 ... + 60°C | |
| **EMC** | | |
| Electrostatic discharge: | 8 kV (air) | IEC/EN 61 000-4-2 |
| Fast transient: | 1 kV | IEC/EN 61 000-4-4 |
| Surge voltages between wires for power supply: | 2 kV | IEC/EN 61 000-4-5 |
| between wire and ground: | 4 kV | IEC/EN 61 000-4-5 |
| Interference suppression: | Limit value class B | EN 55 011 |
| **Degree of protection** | | |
| Housing: | IP 40 | IEC/EN 60 529 |
| Terminals: | IP 20 | IEC/EN 60 529 |
| **Housing:** | Thermoplastic with V0 behaviour according to UL subject 94 | |
| **Vibration resistance:** | Amplitude 0.35 mm, frequency 10 ... 55 Hz | IEC/EN 60 068-2-6 |
| **Climate resistance:** | 20 / 060 / 04 | IEC/EN 60 068-1 |
| **Wire connection:** | 2 x 2.5 mm² solid or 2 x 1.5 mm² stranded ferruled DIN 46 228-1/-2/-3/-4 | |
| **Wire fixing:** | Terminals with self-lifting clamping piece | IEC/EN 60 999-1 |
| **Mounting:** | DIN rail | IEC/EN 60 715 |
| **Weight:** | 58 g | |

### Dimensions

| | |
|---|---|
| **Width x height x depth:** | 17.5 x 89 x 58 mm |

## Standard Type

IK 8808 0.06 ... 160 s

| | | |
|---|---|---|
| Article number: | 0023180 | stock item |
| • Nominal voltage $U_N$: | AC/DC 24 ... 240 V | |
| • Time range: | 0.06 ... 160 s | |
| • Width: | 17.5 mm | |

## Connection Example

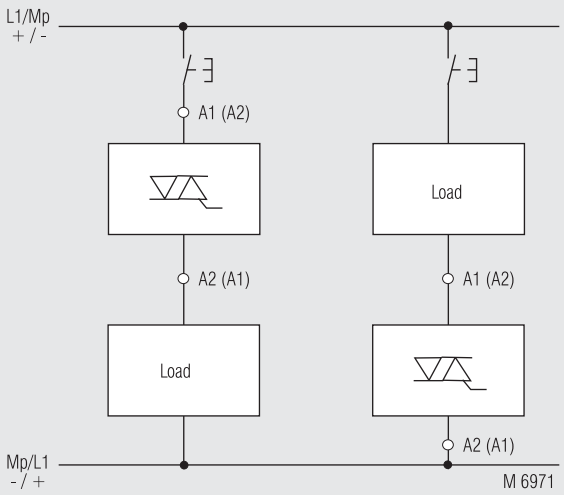

# MINITIMER
## Timer, On delayed
## IK 9906, SK 9906

0239761

IK 9906

SK 9906

- According to IEC/EN 61 812-1
- 8 time ranges from 0.05 s to 300 h selectable via rotational switches
- Voltage range AC/DC 12 ... 240 V
- Adjustment aid for quick setting of long time values
- Suitable for 2-wire proximity sensor control
- 1 changeover contact
- As option connection of a remote potentiometer 10 kΩ
- As option with time interruption / time adding input
- LED indicators for operation, contact position and time delay
- Devices available in 2 enclosure versions:
  IK 9906: depth 59 mm, with terminals at the bottom for installation systems and industrial distribution systems according to DIN 43 880
  SK 9906: depth 98 mm, with terminals at the top for cabinets with mounting plate and cable duct.
- 17.5 mm width

### Function Diagram

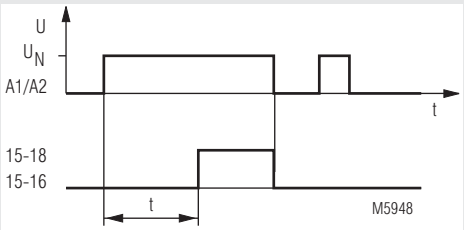


### Approvals and Markings

CE

### Application

Time-dependent controllers

### Indicators

| | |
|---|---|
| green LED: | on when voltage connected |
| yellow LED "R/t": | shows status fo output relay and time delay: |
| - Flashing (short on, long off) | output relay not active; time delay |
| - Continuously on: | output relay active; no time delay |

### Circuit Diagrams

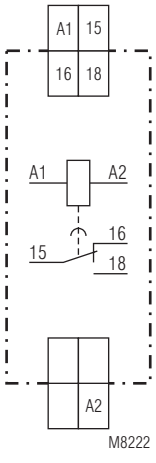


IK 9906.81
SK 9906.81

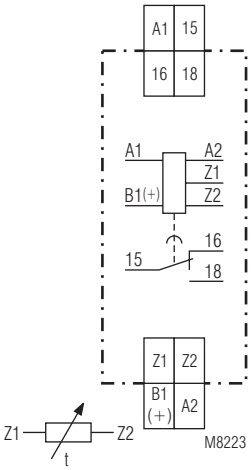


IK 9906.81/500
SK 9906.81/500

### Connection Terminals

| Terminal designation | Signal description |
|---|---|
| A1 | L / + |
| A2 | N / - |
| 15, 16, 18 | Changeover contact |
| B1(+) (only at variant /500) | Control input (interruption of timing with time addition)<br>Control with reference to A2 |
| Z1, Z2 (only at variant /500) | Input to connect a remote potentiometer for time setting |

## Notes

**Control of A1-A2 with proximity sensors**
The input can be controlled by DC 3 wire or AC/DC 2 wire proximity sensors. For operating voltage > 24 V and usage of sensors without built-in short circuit protection a protection resistor on A1 is recommendend to reduce the inrush current. The dimension is as follows:

$R_v \approx$ operating voltage / max. switching current of sensor

The series resistor must not be selected higher than necessary.
Max. values are:

| | | | | |
|---|---|---|---|---|
| Operating voltage: | 48 V | 60 V | 110 V | 230 V |
| Series resistor $R_v$ max: | 270 Ω | 390 Ω | 680 Ω | 1.8 kΩ (1 W) |

**Setting**
A change of the settings for time range and time will be valid immediately. Please note, that a change of time range or time setting during elapse of time can lead to unintended switching of the output contacts.

**Adjustment assistance**
The flashing period of the yellow LED is 1 s ± 4% and can be used to adjust the time. Especially on the lower end of scale and for long times it is suitable as the multiplication factors between the different time ranges are exact without tolerance.
Example:
The required time is 40 min. It has to be adjusted within the range 3 ... 300 min. The time check takes too long as several timing cycles would be necessary for a precise value.

For faster adjustment the setting is made to 0.03 ... 3 min. On this range the potentiometer should be set to 0.4 min (= 24 sec). With the right potentiometer setting the LED must show 24 flashing cycles. After that the time range is switched over to 3 ... 300 min and the setting is complete.

**Time interruption / Time adding**
With the model IK/SK 9906.81/500 the timing cycle can be interrupted by controlling input B1 (+) with control voltage. Removing the control signal will continue the timing cycle (time addition). When time is interrupted the yellow LED goes off.

**Control input B1**
The control input B1 (+) has to be supplied with voltage against A2. The control signal could be the same as the auxiliary/control voltage of A1 or any other voltage between 12 and 240 V AC or DC. Operating a parallel load between B1 and A2 is also possible.

**Remote potentiometer**
With the variant IK/SK 9906.81/500 the time setting can also be made via remote potentiometer of 10 kOhms. It is connected to the terminals Z1-Z2. The corresponding potentiometer on the relay has to be set to min. If no remote potentiometer is required the terminals Z1-Z2 have to be linked. The wires to the remote potentiometers should be installed separately from the lines with mains voltage. If this is not possible, a screened cable is recommendet where the shield is connected to Z1.
To terminals Z1 and Z2 no external voltage must be connected, as the unit might be damaged.
Terminals Z1-Z2 do not have a galvanic separation to terminals A1/A2!

## Setting

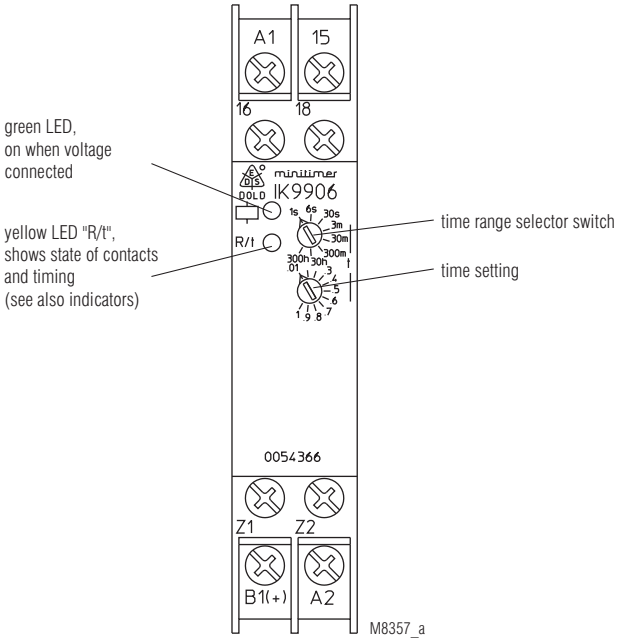

## Technical Data

### Time circuit

| | | |
|---|---|---|
| **Time ranges:** | 8 time ranges settable via rotational switch: | |
| | 0.05 ... 1 s | 0.3 ... 30 min |
| | 0.06 ... 6 s | 3 ... 300 min |
| | 0.3 ... 30 s | 0.3 ... 30 h |
| | 0.03 ... 3 min | 3 ... 300 h |
| **Time setting t:** | continuous, 1:100 on relative scale | |
| **Recovery time:** | | |
| at DC 24 V: | approx. 15 ms | |
| at DC 240 V: | approx. 50 ms | |
| at AC 230 V: | approx. 80 ms | |
| **Repeat accuracy:** | ± 0.5 % of selected end of scale value + 20 ms | |
| **Voltage and temperature influence:** | ≤ 1 % with the complete operating range | |

### Input

| | | |
|---|---|---|
| **Nominal voltage $U_N$:** | AC/DC 12 ... 240 V | |
| **Voltage range:** | 0.8 ... 1.1 $U_N$ | |
| **Frequency range (AC):** | 45 ... 400 Hz | |
| **Nominal consumption** | | |
| at AC 12 V: | approx.1.5 VA | |
| at AC 24 V: | approx. 2 VA | |
| at AC 240 V: | approx. 3 VA | |
| at DC 12 V: | approx.1 W | |
| at DC 24 V: | approx. 1 W | |
| at DC 240 V: | approx. 1 W | |
| **Release voltage (A1/A2)** | | |
| AC 50 Hz: | approx. 7.5 V | |
| DC: | approx. 7 V | |
| **Max. permitted residual current with 2-wire proximity sensor control (A1-A2)** | | |
| up to AC/DC 150 V: | AC resp. DC 5 mA | |
| up to AC/DC 264 V: | AC resp. DC 3 mA | |
| **Control voltage (B1/A2)** | | |
| IK/SK 9906.81/500: | AC/DC 12 ... 240 V | |
| **Voltage range (B1/A2):** | 0.8 ... 1.1 UN | |
| **Control current (B1)** | | |
| IK/SK 9906.81/500: | input resistance approx. 220 kΩ in series with diode | |
| **Release voltage (B1/A2)** | | |
| IK/SK 9906.81/500: | | |
| AC 50 Hz: | approx. 5 V | |
| DC: | approx. 4 V | |

### Output

| | | |
|---|---|---|
| **Contacts** | | |
| IK/SK 9906.81: | 1 changeover contact | |
| **Contact material::** | AgNi | |
| **Measured nominal voltage:** | AC 250 V | |
| **Thermal current $I_{th}$:** | 4 A (see see quadratic total current limit curve) | |
| **Switching capacity** | | |
| to AC 15 | | |
| NO contact: | 3 A / AC 230 V | IEC/EN 60 947-5-1 |
| NC contact: | 1 A / AC 230 V | IEC/EN 60 947-5-1 |
| to DC 13: | 1 A / DC 24 V | |
| **Electrical life** | | |
| to AC 15 at 1 A, AC 230 V: | 1.5 x $10^5$ switch.cycles | IEC/EN 60 947-5-1 |
| **Permissible switching frequency:** | 36 000 switching cycles / h | |
| **Short circuit strength max. fuse rating:** | 4 A gL | IEC/EN 60 947-5-1 |
| **Mechanical life:** | ≥ 30 x $10^6$ switching cycles | |

## Technical Data

### General Data

| | | |
|---|---|---|
| **Operating mode:** | Continuous operation | |
| **Temperature range:** | | |
| Operation: | - 40 ... + 60 °C (higher temperature with limitations see quadratic total current limit curve) | |
| Storage: | - 40 ... + 70 °C | |
| **Relative air humidity:** | 93 % at 40 °C | |
| **Altitude:** | < 2.000 m | |
| **Clearance and creepage distances** | | |
| rated impulse voltage / pollution degree: | 4 kV / 2 (basis insulation) | IEC 60 664-1 |
| Overvoltage category: | III | |
| Insulation test voltage, type test: | 2.5 kV; 1 min | |
| **EMC** | | |
| Electrostatic discharge: | 8 kV (air) | IEC/EN 61 000-4-2 |
| HF irradiation | | |
| 80 MHz ... 1 GHz: | 20 V / m | IEC/EN 61 000-4-3 |
| 1 GHz ... 2.7 GHz: | 10 V / m | IEC/EN 61 000-4-3 |
| Fast transients: | | |
| A1/A2 and B1(+)/A2 | 4 kV | IEC/EN 61 000-4-4 |
| Z1/Z2: | 2 kV | IEC/EN 61 000-4-4 |
| Surge voltages between | | |
| wires for power supply: | 2 kV | IEC/EN 61 000-4-5 |
| between wire and ground: | 4 kV | IEC/EN 61 000-4-5 |
| HF-wire guided: | 10 V | IEC/EN 61 000-4-6 |
| Interference suppression: | Limit value class B | EN 55011 |
| **Degree of protection** | | |
| Housing: | IP 40 | IEC/EN 60 529 |
| Terminals: | IP 20 | IEC/EN 60 529 |
| **Housing:** | Thermoplastic with V0 behaviour according to UL subject 94 | |
| **Vibration resistance:** | Amplitude 0.35 mm, frequency 10 ... 55 Hz, | IEC/EN 60 068-2-6 |
| **Climate resistance:** | 40 / 060 / 04 | IEC/EN 60 068-1 |
| **Terminal designation:** | EN 50 005 | |
| **Wire connection:** | DIN 46 228-1/-2/-3/-4 | |
| Cross section: | 2 x 2.5 $mm^2$ solid or 2 x 1.5 $mm^2$ stranded wire with sleeve | |
| Stripping length: | 10 mm | |
| **Wire fixing:** | Flat terminals with self-lifting clamping piece | IEC/EN 60 999-1 |
| **Fixing torque:** | 0.8 Nm | |
| **Mounting:** | DIN rail | IEC/EN 60 715 |
| **Weight:** | | |
| IK 9906: | approx. 65 g | |
| SK 9906: | approx. 84 g | |

### Dimensions

| | |
|---|---|
| **Width x height x depth:** | |
| IK 9906: | 17.5 x 90 x 59 mm |
| SK 9906: | 17.5 x 90 x 98 mm |

### Standard Type

IK 9906.81 AC/DC 12 ... 240 V 0.05 s ... 300 h

| | |
|---|---|
| Article number: | 0054364 |
| • Output: | 1 changeover contact |
| • Nominal voltage $U_N$: | AC/DC 12 ... 240 V |
| • Time ranges: | 0.05 s ... 300 h |
| • Width: | 17.5 mm |

SK 9906.81 AC/DC 12 ... 240 V 0.05 s ... 300 h

| | |
|---|---|
| Article number: | 0054364 |
| • Output: | 1 changeover contact |
| • Nominal voltage $U_N$: | AC/DC 12 ... 240 V |
| • Time ranges: | 0.05 s ... 300 h |
| • Width: | 17.5 mm |

## Variant

IK/SK 9906.81/500:

- Connection facility for a remote potentiometer 10 kOhms to adjust the time
- Additonal control input B1 for time interruption / time additon

### Ordering example for variant

IK 9906 .81 /_ _ _ AC/DC 12 ... 240 V 0.05 s ... 300 h

- Time range
- Nominal voltage
- Variant, if required
- Contacts
- Type

## Characteristics

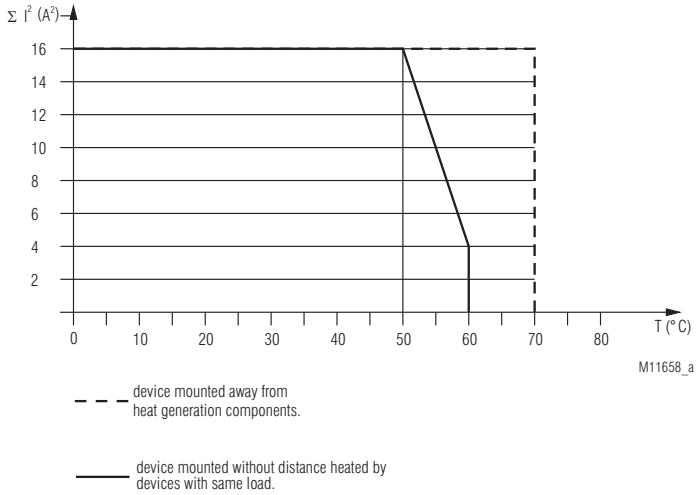


## Connection Diagrams

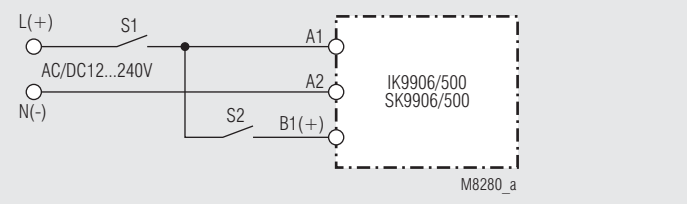


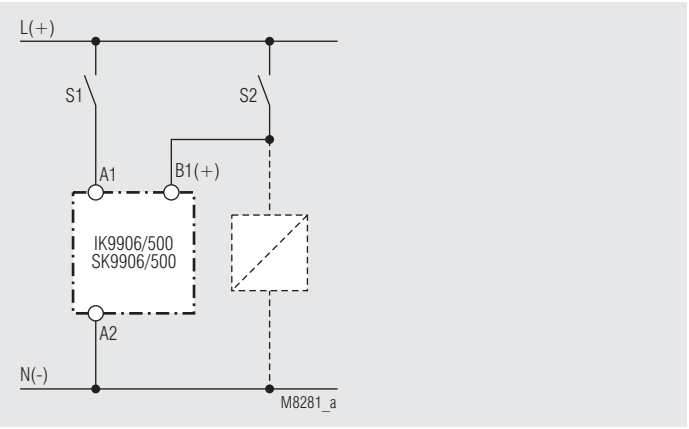


Control with parallel connected load

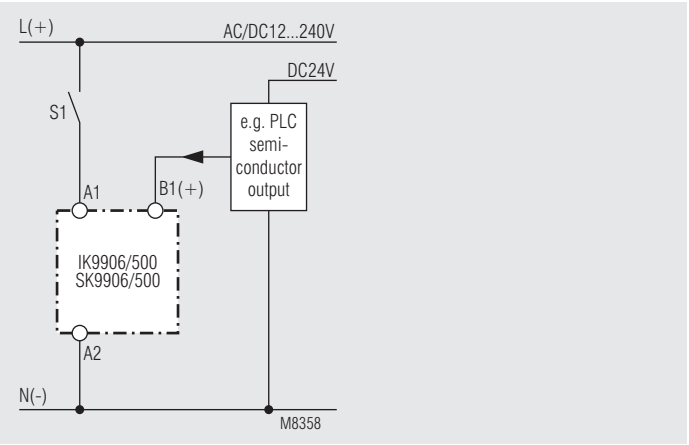


Connection with 2 different control voltages

## Accessories

AD 3: External potentiometer 10 kΩ
Article number: 0028962

The external potentiometer is used for remote setting of the time delay. The internal potentiometer of the timer must be set to min. time delay.

Degree of protection front side: IP 60

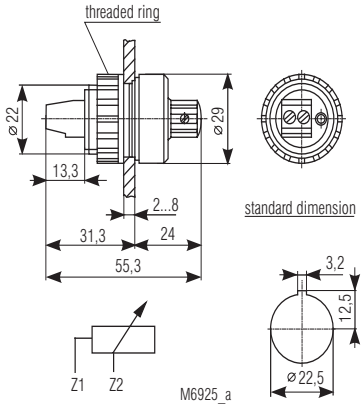

# MINITIMER
## Timer, On Delayed
## BC 7930N

0221544

- According to IEC/EN 61 812-1
- Time delay between 0.05 s ... 10 h
- Repeat accuracy ≤ 0.5 % + 10 ms
- Dual voltage supply
- LED indicator for contact position
- 1 changeover contact
- Wire connection: also 2 x 1.5 mm² stranded ferruled (isolated), DIN 46 228-1/-2/-3/-4 or 2 x 2.5 mm² stranded ferruled DIN 46 228-1/-2/-3
- Width 22.5 mm

### Function Diagram

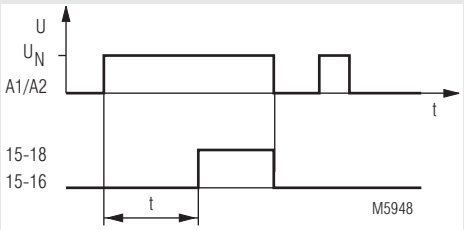


### Approvals and Markings

CE

### Applications

Time dependent controllers

### Indicators

| | |
|---|---|
| LED: | on when output relay activated (contacts 15-18 are closed) |

### Circuit Diagram

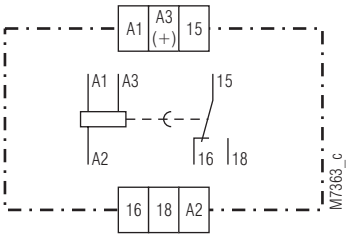


### Connection Terminals

| Terminal designation | Signal description |
|---|---|
| A1, A3(+), A2 | Operating voltage |
| 15, 16, 18 | Changeover contact |

## Technical Data

### Time Circuit

| | | |
|---|---|---|
| **Time ranges:** | 0.05 ... 1 s | 0.5 ... 10 min. |
| | 0.15 ... 3 s | 1.5 ... 30 min. |
| | 0.5 ... 10 s | 3 ... 60 min. |
| | 1.5 ... 30 s | 0.15 ... 3 h |
| | 5 ... 100 s | 0.5 ... 10 h |
| | 15 ... 300 s | |
| **Time setting:** | stepless 1:20 | |
| **Recovery time:** | ≤ 100 ms | |
| **Repeat accuracy:** | ≤ 0.5 % + 10 ms | |
| **Voltage influence:** | ≤ 1 % | |
| **Temperature influence:** | ≤ 0.25 % / K | |

### Input

| | |
|---|---|
| **Nominal voltage $U_N$** | |
| **(**Operating voltage): | AC/DC 24 V[1)] + AC 230 V[2)] |
| | AC/DC 24 V[1)] + AC 110 ... 127 V[2)] |
| | AC/DC 24 V[1)] + AC 42 V[2)] |
| | AC/DC 12 V |
| | [1)] at terminals A3-A2 |
| | [2)] at terminals A1-A2 |
| **Voltage range:** | 0.8 ... 1.1 $U_N$ at AC |
| | 0.9 ... 1.25 $U_N$ at DC |
| **Nominal consumption:** | AC: 4 VA |
| | DC: 0.4 W |
| **Nominal frequency:** | 50 / 60 Hz |
| **Frequency range:** | ± 5 % $f_N$ |
| **Release voltage:** | 15 % $U_N$ |

### Output

| | | |
|---|---|---|
| **Contacts:** | 1 changeover contact | |
| **Contact material:** | AgNi | |
| **Measured nominal voltage:** | AC 250 V | |
| **Thermal current $I_{th}$:** | 4 A | |
| **Switching capacity** | | |
| to AC 15 | | |
| NO contact: | 3 A / AC 230 V | IEC/EN 60 947-5-1 |
| NC contact: | 1 A / AC 230 V | IEC/EN 60 947-5-1 |
| **Electrical life** | | IEC/EN 60 947-5-1 |
| to AC 15 at 1 A, AC 230 V: | 1.5 x $10^5$ switching cycles | |
| **Permissible switching frequency:** | 36 000 switching cycles / h | |
| **Short circuit strength max. fuse rating:** | 4 A gG / gL | IEC/EN 60 947-5-1 |
| **Mechanical life:** | $10^8$ switching cycles | |

### General Data

| | | |
|---|---|---|
| **Operating mode:** | Continuous operation | |
| **Temperature range** | | |
| Operation: | - 20 ... + 60 °C | |
| Storage: | - 25 ... + 70 °C | |
| **Relative air humidity:** | 95 % at 40 °C | |
| **Altitude:** | < 2.000 m | |
| **Clearance and creepage distances** | | |
| overvoltge category / pollution degree: | 4 kV / 2 (basis insulation) | IEC 60 664-1 |
| Overvoltage category: | III | |
| Insulation test voltage, type test: | 2.5 kV; 1 min | |
| **EMC** | | |
| Electrostatic discharge: | 6 kV (contact) | IEC/EN 61 000-4-2 |
| | 8 kV (air) | IEC/EN 61 000-4-2 |
| HF irradiation 80 MHz ... 2.7 GHz: | 20 V / m | IEC/EN 61 000-4-3 |
| Fast transients: | 4 kV | IEC/EN 61 000-4-4 |
| Surge voltages | | |
| between A1/A2: | 2 kV | IEC/EN 61 000-4-5 |
| between A3(+)/A2: | 0,5 kV | IEC/EN 61 000-4-5 |
| between A1, A2/PE: | 4 kV | IEC/EN 61 000-4-5 |
| HF-wire guided: | 20 V | IEC/EN 61 000-4-6 |
| Interference suppression: | Limit value class B | EN 55 011 |

## Technical Data

| | | |
|---|---|---|
| **Degree of protection** | | |
| Housing: | IP 40 | IEC/EN 60 529 |
| Terminals: | IP 20 | IEC/EN 60 529 |
| **Housing:** | Thermoplastic with V0 behaviour according to UL subject 94 | |
| **Vibration resistance:** | Amplitude 0.35 mm frequency 10 ... 55 Hz | IEC/EN 60 068-2-6 |
| **Climate resistance:** | 20 / 060 / 04 | IEC/EN 60 068-1 |
| **Terminal designation:** | EN 50 005 | |
| **Wire connection:** | | |
| Cross section: | 1 x 4 $mm^2$ solid or<br>1 x 2.5 $mm^2$ stranded ferruled (isolated) or<br>2 x 1.5 $mm^2$ stranded ferruled (isolated) DIN 46 228-1/-2/-3/-4 or<br>2 x 2.5 $mm^2$ stranded ferruled DIN 46 228-1/-2/-3 | |
| Insulation of wires or sleeve length: | 10 mm | |
| **Wire fixing:** | Terminal screws M 3.5<br>Box terminal with wire protection | |
| **Fixing torque:** | 0.8 Nm | |
| **Mounting:** | DIN rail | IEC/EN 60 715 |
| **Weight:** | 80 g | |

### Dimensions

| | |
|---|---|
| **Width x height x depth:** | 22.5 x 84 x 97 mm |

## Standard Type

BC 7930N.81 AC/DC 24 V + AC 230 V 5 ... 100 s

Article number: 0052652

- Front colour grey, with box terminals
- Output: 1 changeover contact
- Nominal voltage $U_N$: AC/DC 24 V + AC 230 V
- Time range: 5 ... 100 s
- Width: 22.5 mm

## Ordering Example

BC 7930N .81 AC/DC 24 + AC 230 V 50 / 60 Hz 10 s

- 10 s: Time range end value
- 50 / 60 Hz: Nominal frequency
- AC/DC 24 + AC 230 V: Nominal voltage
- .81: Contacts
- BC 7930N: Type

# MINITIMER
## Time Relay With Operate Delay
## BC 7934N

- According to IEC/EN 61 812-1
- 8 switching ranges from 0.05 s ... 16 h
- Infinite variable delay on every range 1 : 10
- Dual-voltage design as standard (e.g. AC 230 V + AC/DC 24 V)
- LED indicator for contact position
- 1 changeover contact
- Wire connection: also 2 x 1.5 mm² stranded ferruled (isolated), DIN 46 228-1/-2/-3/-4 or 2 x 2.5 mm² stranded ferruled DIN 46 228-1/-2/-3
- Width 22.5 mm

### Function Diagram

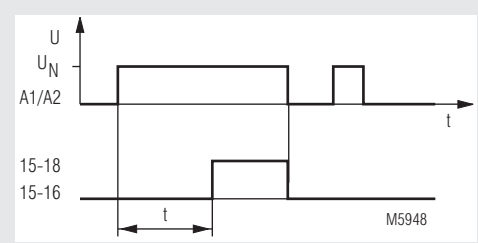


### Approvals and Markings

CE

### Applications

Time-dependent controllers

### Indicators

| | |
|---|---|
| LED: | on when output relay activated (contacts 15 - 18 are closed) |

### Circuit Diagrams

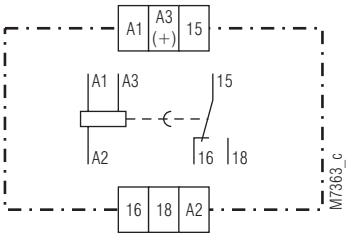


### Connection Terminals

| Terminal designation | Signal description |
|---|---|
| A1, A3(+), A2 | Operating voltage |
| 15, 16, 18 | Changeover contact |

## Technical Data

### Time Circuit

| | | |
|---|---|---|
| **Time ranges:** | 8 switching ranges | |
| | 0.05 ... 0.5 s | 0.4 ... 4 min. |
| | 0.2 ... 2 s | 1.5 ... 15 min. |
| | 1.5 ... 15 s | 0.2 ... 2 h |
| | 0.2 ... 2 min. | 1.6 ... 16 h |
| **Time setting:** | infinitely variable 1:10 | |
| **Recovery time:** | ≤ 100 ms | |
| **Repeat accuracy:** | ≤ 0.5 % + 10 ms | |
| **Voltage influence:** | ≤ 1 % | |
| **Temperature influence:** | ≤ 0.25 % / K | |

### Input

| | | |
|---|---|---|
| **Nominal voltage $U_N$** | | |
| **(**Operating voltage): | AC/DC 24 V[1)] + AC 230 V[2)] | |
| | AC/DC 24 V[1)] + AC 110 ... 127 V[2)] | |
| | AC/DC 24 V[1)] + AC 42 V[2)] | |
| | [1)] on terminals A3-A2 | |
| | [2)] on terminals A1-A2 | |
| **Voltage range:** | 0.8 ... 1.1 $U_N$ with AC | |
| | 0.9 ... 1.25 $U_N$ with DC | |
| **Nominal consumption:** | AC: 4 VA | |
| | DC: 0.4 W | |
| **Nominal frequency:** | 50 / 60 Hz | |
| **Frequency range:** | ± 5 % $f_N$ | |
| **Release voltage:** | 15 % $U_N$ | |

### Output

| | | |
|---|---|---|
| **Contacts:** | 1 changeover contact | |
| **Contact material:** | AgNi | |
| **Measured nominal voltage:** | AC 250 V | |
| **Thermal current $I_{th}$:** | 4 A | |
| **Switching capacity** | | |
| to AC 15 | | |
| NO contact: | 3 A / AC 230 V | IEC/EN 60 947-5-1 |
| NC contact: | 1 A / AC 230 V | IEC/EN 60 947-5-1 |
| **Electrical life** | | IEC/EN 60 947-5-1 |
| to AC 15 at 1 A, AC 230 V: | 1.5 x $10^5$ switching cycles | |
| **Permissible switching frequency:** | 36 000 switching cycles / h | |
| **Short circuit strength max. fuse rating:** | 4 A gG / gL | IEC/EN 60 947-5-1 |
| **Mechanical life:** | $10^8$ switching cycles | |

### General Data

| | | |
|---|---|---|
| **Operating mode:** | Continuous operation | |
| **Temperature range** | | |
| Operation: | - 20 ... + 60 °C | |
| Storage: | - 25 ... + 70 °C | |
| **Relative air humidity:** | 95 % at 40 °C | |
| **Altitude:** | < 2.000 m | |
| **Clearance and creepage distances** | | |
| overvoltge category / pollution degree: | 4 kV / 2 (basis insulation) | IEC 60 664-1 |
| Overvoltage category: | III | |
| Insulation test voltage, type test: | 2.5 kV; 1 min | |
| **EMC** | | |
| Electrostatic discharge: | 6 kV (contact) | IEC/EN 61 000-4-2 |
| | 8 kV (air) | IEC/EN 61 000-4-2 |
| HF irradiation 80 MHz ... 2,7 GHz: | 20 V/m | IEC/EN 61 000-4-3 |
| Fast transients: | 4 kV | IEC/EN 61 000-4-4 |
| Surge voltages | | |
| between A1/A2: | 2 kV | IEC/EN 61 000-4-5 |
| between A3(+)/A2: | 0,5 kV | IEC/EN 61 000-4-5 |
| between A1, A2/PE: | 4 kV | IEC/EN 61 000-4-5 |
| HF-wire guided: | 20 V | IEC/EN 61 000-4-6 |
| Interference suppression: | Limit value class B | EN 55 011 |

## Technical Data

### Degree of protection

| | | |
|---|---|---|
| Housing: | IP 40 | IEC/EN 60 529 |
| Terminals: | IP 20 | IEC/EN 60 529 |
| **Housing:** | Thermoplastic with V0 behaviour according to UL subject 94 | |
| **Vibration resistance:** | Amplitude 0.35 mm frequency 10 ... 55 Hz | IEC/EN 60 068-2-6 |
| **Climate resistance:** | 20 / 060 / 04 | IEC/EN 060 068-1 |
| **Terminal designation:** | EN 50 005 | |
| **Wire connection:** | | |
| Cross section: | 1 x 4 $mm^2$ solid or<br>1 x 2.5 $mm^2$ stranded ferruled (isolated) or<br>2 x 1.5 $mm^2$ stranded ferruled (isolated) DIN 46 228-1/-2/-3/-4 or<br>2 x 2.5 $mm^2$ stranded ferruled DIN 46 228-1/-2/-3 | |
| Insulation of wires or sleeve length: | 10 mm | |
| **Wire fixing:** | Terminal screws M 3.5<br>Box terminal with wire protection | |
| **Fixing torque:** | 0.8 Nm | |
| **Mounting:** | DIN rail | IEC/EN 60 715 |
| **Weight:** | 80 g | |

### Dimensions

| | |
|---|---|
| **Width x height x depth:** | 22.5 x 84 x 97 mm |

### Standard Type

BC 7934N.81 AC/DC 24 V + AC 230 V 16 h

Article number: 0052673

- Front colour grey, with box terminals
- Output: 1 changeover contact
- Nominal voltage $U_N$: AC/DC 24 V + AC 230 V
- Time ranges: from 0.05 s ... 16 h
- Width: 22.5 mm

### Ordering Example

BC 7934N .81 AC/DC 24 + AC 230 V 0.05 s ... 16 h

- 0.05 s ... 16 h — Time range end value
- AC/DC 24 + AC 230 V — Nominal voltage
- .81 — Contacts
- BC 7934N — Type

# MINITIMER
## Time Relay With Operate Delay
## MK 7858

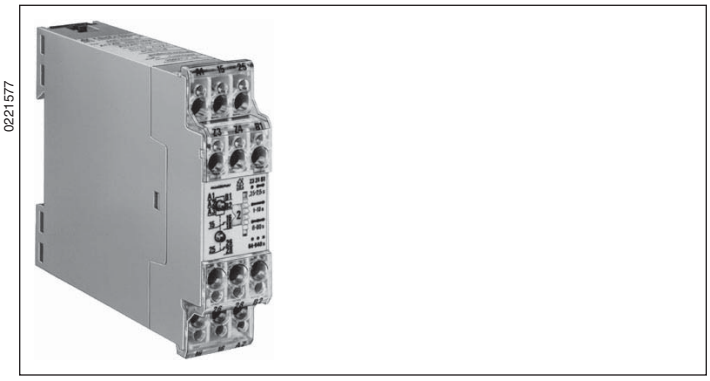


- According to IEC/EN 61 812-1
- Delay of 0.25 ... 640 s or min.
- 4 switchable time ranges
- Repeat accuracy ≤ ± 0.5 %
- Can be controlled with 2-wire initiators at terminals A1-A2, residual current ≤ 5 mA
- Available as 2-voltage version
- Available with instantaneous contact
- 2 changeover contacts
- 2 LED displays for power supply and contact position
- Width 22.5 mm

### Function Diagram

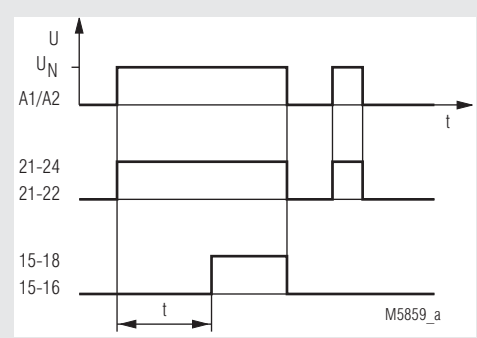


### Approvals and Markings

CE

### Application

Time-dependent controllers

### Indicators

| | |
|---|---|
| upper LED: | on, when supply connected |
| lower LED: | on, when output relay energized |

### Circuit Diagram

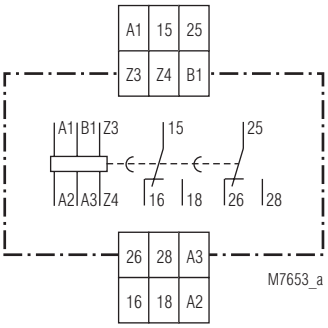


MK 7858.82/024

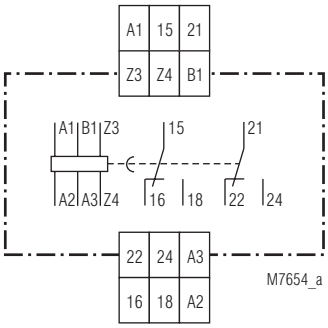


MK 7858.32/024

### Connection Terminals

| Terminal designation | Signal description |
|---|---|
| A1, A3(+), A2 | Operating voltage |
| Z3, Z4, B1 | Control inputs for programming of the time ranges |
| 15, 16, 18 | 1. Wechslerkontakt (verzögert) |
| 25, 26, 28 | MK7858.82/024<br>2. Wechslerkontakt (verzögert)<br>MK7858.32/024 |
| 21, 22, 24 | 2. Wechslerkontakt (Sofortkontakt) |

## Technical Data

### Time circuit

**Time ranges:** 4 time ranges can be programmed externally via terminals Z3-Z4-B1

| Bridge Z3 Z4 B1 | Device with seconds ranges | Device with minutes ranges |
|---|---|---|
| 0 0—0 | 0.25 - 2.5 s | 0.25 - 2.5 min |
| 0———0 | 1 - 10 s | 1 - 10 min |
| 0—0—0 | 8 - 80 s | 8 - 80 min |
| 0 0 0 | 64 - 640 s | 6 - 640 min |

**Time setting:** steppless
**Recovery time**
tw 50 / 100: 40 ms
**Repeat accuracy:** ≤ ± 0.5 % of set value
**Voltage influence:** ≤ 1 %
**Temperature influence:** < 0.1 % / K

### Input

**Nominal voltage $U_N$:** 2-voltage version
AC/DC 24 V[1)] + AC 110 ... 127 V[2)]
AC/DC 24 V[1)] + AC 230 V[2)]
[1)] at terminals A3 - A2
[2)] at terminals A1 - A2
**Voltage range:** AC 0.8 ... 1.1 $U_N$
DC 0.9 ... 1.25 $U_N$

| **Nominal consumption** | AC 230 V | DC 24 V |
|---|---|---|
| MK 7858.82/024: | 8.5 VA | 1 W |
| MK 7858.32/024: | 9.5 VA | 1 W |

**Nominal frequency:** 50 / 60 Hz
**Frequency range:** ± 5 % $f_N$
**Release voltage:** 15 % $U_N$
**Permissible residual current:** 5 mA

### Output

**Contacts**
MK 7858.82/024: 2 delayed changeover contacts
MK 7858.32/024: 1 delayd chageover contact
1 non-delayed changeover contact
**Contact material:** AgNi 0.15µ, gold plated
**Measured nominal voltage:** AC 250 V
**Thermal current $I_{th}$:** 5 A
**Switching capacity**
to AC 15:
NO contact: 3 A / AC 230 V IEC/EN 60 947-5-1
NC contact: 1 A / AC 230 V IEC/EN 60 947-5-1
**Electrical life** IEC/EN 60 947-5-1
to AC 15 at 3 A, AC 230 V: 5 x $10^5$ switching cycles
**Permissible operating frequency:** 3 000 switching cycles / h
**Short circuit strength**
**max. fuse rating:** 6 A gG / gL IEC/EN 60 947-5-1
**Mechanical life:** 30 x $10^6$ switching cycles

### General Data

**Operating mode:** Continuous operation
**Temperature range**
Operation: - 20 ... + 60 °C
Storage: - 20 ... + 60 °C
**Altitude:** < 2,000 m
**Clearance and creepage distances**
rated impulse voltage / pollution degree: 4 kV / 3 IEC 60 664-1
**EMC**
Electrostatic discharge: 4 kV (air) IEC/EN 61 000-4-2
HF irradiation:
80 MHz ... 1 Ghz: 12 V / m IEC/EN 61 000-4-3
1 GHz ... 2.7 GHz: 10 V / m IEC/EN 61 000-4-3
Fast transients: 4 kV IEC/EN 61 000-4-4
Surge voltages between
wires for power supply: 2 kV IEC/EN 61 000-4-5
between wire and ground: 4 kV IEC/EN 61 000-4-5
HF-wire guided: 10 V IEC/EN 61 000-4-6
Interference suppression Limit value class B EN 55 011

## Technical Data

**Degree of protection**
Housing: IP 40 IEC/EN 60 529
Terminals: IP 20 IEC/EN 60 529
**Housing:** Thermoplastic with V0 behaviour according to UL subject 94
**Vibration resistance:** Amplitude 0.35 mm, frequency 10 ... 55 Hz, IEC/EN 60 068-2-6
**Climate resistance:** 20 / 60 / 04 IEC/EN 60 068-1
**Terminal designation:** EN 50 005
**Wire connection:** 2 x 1.5 $mm^2$ solid or
2 x 1.0 $mm^2$ stranded wire with sleeve
DIN 46 228-1/-2/-3/-4
**Wire fixing:** Flat terminals with self-lifting clamping piece IEC/EN 60 999-1
**Fixing torque:** 0.4 Nm
**Mounting:** DIN rail IEC/EN 60 715
**Weight:** 150 g

### Dimensions

**Width x height x depth:** 22.5 x 82 x 99 mm

## Standard Type

MK 7858.82/024 AC/DC 24 V + AC 220 ... 240 V 640 s
Article numer: 0039447
- Output: 2 changeover contacts, delayed
- Nominal voltage $U_N$: AC/DC 24 V + AC 220 ... 240 V
- Time ranges: 0.25 ... 640 s
- Width: 22.5 mm

## Order Example

MK 7858 .82 /024 AC/DC 24 V + AC 220 ... 240 V 640 s

- 640 s — Time range limit value
- AC/DC 24 V + AC 220 ... 240 V — Nominal voltage
- .82 — Contact
- MK 7858 — Type

## Accessories

ET 4752-143: Marking plate
Article number: 0043203

## Safety Remark

- when operating the unit the general standards for electrostatic endangered part have to be ovserved

# MINITIMER
## Timer, On Delayed
## MK 9906, AA 9906/200

0221582

MK 9906

AA 9906/200

- According to IEC/EN 61 812-1
- Time delay of 0.05 s ... 100 h
- Repeat accuracy ≤ ± 0.5 %
- Adjustable on absolute scale
- MK 9906 as a 2-voltage version
- AA 9906/200 with wide input range AC/DC 24 ... 240 V
- Available with instantaneous contact
- LED indicators for operation and contact position
- Controllable by proximity sensors
- 2 changeover contacts
- MK 9906: width 22.5 mm
  AA 9906/200: width 45 mm

### Function Diagram

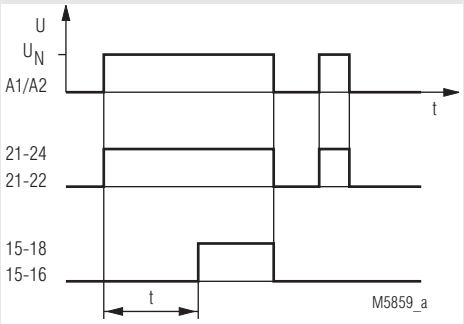


### Approvals and Markings

CE

### Applications

Time-dependent controllers

### Indicators

| | |
|---|---|
| upper LED: | on, when supply connected |
| lower LED: | on, when output relay active (contact 15-18 closed) |

### Circuit Diagrams

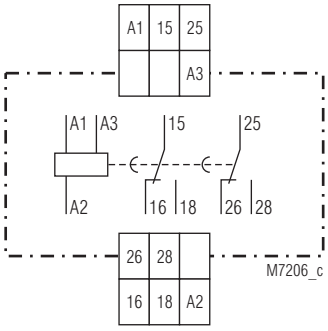


MK 9906.82

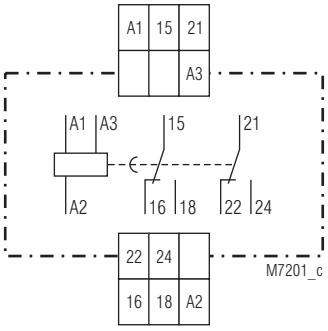


MK 9906.32

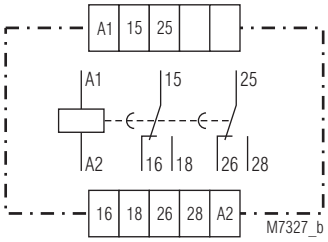


AA 9906.82/200

### Connection Terminals

| Terminal designation | Signal description |
|---|---|
| A1, A3(+), A2 | Operating voltage |
| 15, 16, 18<br>25, 26, 28 | 2 changeover contacts (delayed, MK 9906.82, AA 9906.82/200 |
| 21, 22, 24 | Changeover contact (instantaneous contact, MK 9906.32) |

### Technical Data

**Time Circuit**

| | | |
|---|---|---|
| **Time ranges:** | 0.05 ... 1 s | 0.5 ... 10 min |
| | 0.15 ... 3 s | 1.5 ... 30 min |
| | 0.5 ... 10 s | 3 ... 60 min |
| | 1.5 ... 30 s | 5 ... 100 min |
| | 3 ... 60 s | 0.15 ... 3 h |
| | 5 ... 100 s | 0.5 ... 10 h |
| | 15 ... 300 s | 1.5 ... 30 h |
| | | 5 ... 100 h |

| | |
|---|---|
| **Time setting:** | steppless on an absolute scale |
| **Recovery time** | |
| tw 50 / 100: | 40 ms |
| **Repeat accuracy:** | ≤ ± 0.5 % of the scale limit value |
| **Voltage influence:** | ≤ 1 % |
| **Temperature influence:** | < 0.1 % / K |

**Input**

| | |
|---|---|
| **Nominal voltage $U_N$:** | |
| MK 9906: | AC/DC 24 V [1] + AC 110 ... 127 V [2]<br>AC/DC 24 V [1] + AC 230 ... 240 V [2]<br>also available (on request)<br>as single-voltage version<br>AC/DC 12 V, AC/DC 42 ... 48 V<br>[1] at terminals A3 - A2<br>[2] at terminals A1 - A2 |
| AA 9906/200: | AC/DC 24 ... 240 V |
| **Voltage range:** | |
| MK 9906: | AC 0.8 ... 1.1 $U_N$<br>DC 0.9 ... 1.25 $U_N$ |
| AA 9906/200: | AC 19 ... 264 V<br>DC 19 ... 300 V |

## Technical Data

| | | | |
|---|---|---|---|
| **Nominal consumption:** | AC 230 V | DC 24 V | DC 42 V |
| | 8.5 VA | 1 W | 1 W |
| **Nominal frequency:** | 50 / 60 Hz | | |
| **Frequency range** | ± 5 % $f_N$ | | |
| **Resetting voltage:** | 15 % $U_N$ | | |
| **Permissible residual current:** | 5 mA | | |

### Output

| | | |
|---|---|---|
| **Contacts** | | |
| MK 9906: | 2 changeover contacts | |
| MK 9906.32: | 1 changeover contact, non-delayed | |
| | 1 changeover contact, delayed | |
| AA 9906.82/200: | 2 changeover contacts | |
| **Measured nominal voltage:** | AC 250 V | |
| **Release time:** | 30 ms | |
| **Thermal current $I_{th}$:** | 5 A | |
| **Switching capacity** | | |
| to AC 15 | | |
| MK 9906 | | |
| NO contact: | 3 A / AC 230 V | IEC/EN 60 947-5-1 |
| NC contact: | 1 A / AC 230 V | IEC/EN 60 947-5-1 |
| AA 9906/200 | | |
| NO contact: | 10 A / AC 230 V | IEC/EN 60 947-5-1 |
| NC contact: | 5 A / AC 230 V | IEC/EN 60 947-5-1 |
| **Electrical life** | | IEC/EN 60 947-5-1 |
| to AC 15 at 3 A, AC 230 V: | 5 x $10^5$ switching cycles | |
| **Permissible switching frequency:** | 6 000 switching cycles / h | |
| **Short circuit strength max. fuse rating:** | 6 A gL | IEC/EN 60 947-5-1 |
| **Mechanical life:** | > 30 x $10^6$ switching cycles | |

### General Data

| | | |
|---|---|---|
| **Operating mode:** | Continuous operation | |
| **Temperature range** | | |
| **Operation and Storage** | | |
| MK 9906: | - 20 ... + 60 °C | |
| AA 9906/200: | - 40 ... + 60 °C | |
| **Relative air humidity:** | 93 % at 40 °C | |
| **Altitude:** | < 2,000 m | |
| **Clearance and creepage distances** | | |
| rated impulse voltage / pollution degree: | | |
| Input/output: | 4 kV / 2 (Basis insulation) | IEC 60 664-1 |
| Overvoltage category: | III | |
| Insulation test voltage, type test: | 2,5 kV; 1 min | |
| **EMC** | | |
| Electrostatic discharge: | 8 kV (air) | IEC/EN 61 000-4-2 |
| HF irradiation | | |
| MK 9906: | | |
| 80 MHz ... 1 GHz: | 10 V / m | IEC/EN 61 000-4-3 |
| 1 GHz ... 2 GHz: | 3 V / m | IEC/EN 61 000-4-3 |
| 2 GHz ... 2.7 GHz: | 1 V / m | IEC/EN 61 000-4-3 |
| AA 9906/200: | | |
| 80 MHz ... 1 GHz: | 10 V / m | IEC/EN 61 000-4-3 |
| 1 GHz ... 2 GHz: | 10 V / m | IEC/EN 61 000-4-3 |
| 2 GHz ... 2.7 GHz: | 10 V / m | IEC/EN 61 000-4-3 |
| Fast transients | 4 kV | IEC/EN 61 000-4-4 |
| Surge voltages between | | |
| wires for power supply: | 1 kV | IEC/EN 61 000-4-5 |
| between wire and ground: | 2 kV | IEC/EN 61 000-4-5 |
| HF-wire guided: | 10 V | IEC/EN 61 000-4-6 |
| Interference suppression | Limit value class B | EN 55 011 |
| **Degree of protection** | | |
| Housing: | IP 40 | IEC/EN 60 529 |
| Terminals: | IP 20 | IEC/EN 60 529 |
| **Housing:** | Thermoplastic with V0 behaviour according to UL subject 94 | |
| **Vibration resistance:** | Amplitude 0.35 mm, frequency 10 ... 55 Hz, | IEC/EN 60 068-2-6 |
| **Climate resistance:** | 20 / 060 / 04 | IEC/EN 60 068-1 |
| **Terminal designation:** | EN 50 005 | |

## Technical Data

| | | |
|---|---|---|
| **Wire connection:** | | |
| MK 9906: | 2 x 1.5 mm² solid or<br>2 x 1.0 mm² stranded wire with sleeve<br>DIN 46 228-1/-2/-3/-4 | |
| AA 9906/200: | 2 x 2.5 mm² solid or<br>2 x 1.5 mm² stranded wire with sleeve<br>DIN 46 228-1/-2/-3/-4 | |
| **Wire fixing:** | Flat terminals with self-lifting clamping piece | IEC/EN 60 999-1 |
| Insulation of wires or sleeve length | | |
| MK 9906: | 8 mm | |
| AA 9906/200: | 10 mm | |
| **Fixing torque:** | | |
| MK 9906: | 0.4 Nm | |
| AA 9906/200: | 0.8 Nm | |
| **Mounting:** | DIN rail | IEC/EN 60 715 |
| **Weight** | | |
| MK 9906: | 140 g | |
| AA 9906/200: | 160 g | |

### Dimensions

| | |
|---|---|
| **Width x height x depth** | |
| MK 9906: | 22.5 x 82 x 99 mm |
| AA 9906/200: | 45 x 77 x 127 mm |

## Standard Types

MK 9906 AC/DC 24 V + AC 220 ... 240 V 0.5 ... 10 s

| | |
|---|---|
| Article number: | 0044853 |
| • Output: | 2 changeover contacts |
| • Nominal voltage $U_N$: | AC/DC 24 V + AC 220 ... 240 V |
| • Width: | 22.5 mm |

AA 9906.82/200 AC/DC 24 ... 240 V 1,5 ... 30 s

| | |
|---|---|
| Article number: | 0039285 |
| • Output: | 2 changeover contacts |
| • Nominal voltage $U_N$: | AC/DC 24 ... 240 V |
| • Width: | 45 mm |

## Ordering Example

MK 9906 .82 AC/DC 24 V + AC 230 ... 240 V 50 / 60 Hz 100 s

- Timerangelimitvalue
- Nominal frequency
- Nominal voltage
- Contacts
- Type

## Accessories

for MK 9906:

| | |
|---|---|
| ET 4752-143 | Marking plate<br>Article number: 0043203 |

for AA 9906/200:

| | |
|---|---|
| K 70-34 | Cover<br>Article number: 0011790 |

# MINITIMER
## Timer, On delayed
## MK 9906N

0239282

### Function Diagram

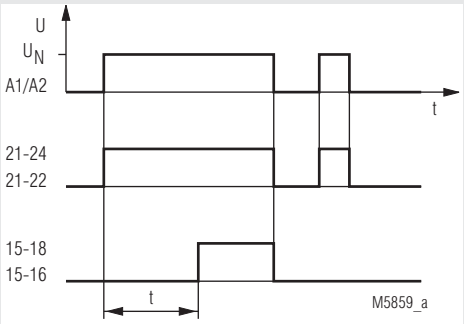


### Circuit Diagrams

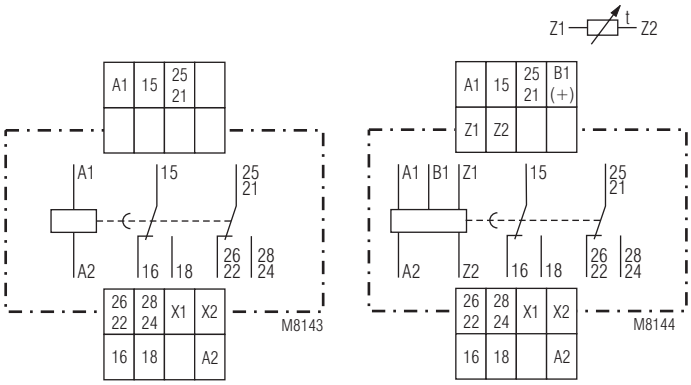


MK 9906N.82 MK 9906N.82/500

### Connection Terminals

| Terminal designation | Signal description |
|---|---|
| A1 | L / + |
| A2 | N / - |
| 15, 16, 18 | Changeover contact |
| 25, 26, 28 | Changeover contact |
| B1(+) | Control Input (time interruption with time adding) |
| X1, X2 | Control Input (programming 2nd delayed C/O contact or instantaneous contact) |
| Z1, Z2 | Input to connect a remote potentiometer for time setting t1 |

### Your Advantages
- 8 time ranges in one unit
- Simplified storage
- High accuracy
- Quick setting of long time values

### Features
- According to IEC/EN 61 812-1
- 8 time ranges from 0.05 s to 300 h selectable via rotational switches
- Voltage range AC/DC 12 ... 240 V
- Adjustment aid for quick setting of long time values
- Suitable for 2-wire proximity sensor control
- 2 changeover contacts, one programmable as instantaneous contact
- LED indicators for operation, contact position and time delay
- Wire connection: also 2 x 1.5 mm² stranded ferruled, or 2 x 2.5 mm² solid DIN 46 228-1/-2/-3/-4
- As option connection of a remote potentiometer
- As option with time interruption / time adding input
- As option with pluggable terminal blocks for easy exchange of devices
  - with screw terminals
  - or with cage clamp terminals
- 22.5 mm width

### Approvals and Markings

CE | c UL us LISTED * Canada / USA

* see variants

### Applications

Time-dependent controllers

### Indicators

| | |
|---|---|
| green LED: | on when voltage connected |
| yellow LED "R/t": | shows status of output relay and time delay: |
| - Flashing (long on, short off) | output relay not active; time delay |
| - Continuously on: | output relay active after time delay |

### Notes

**Control of A1-A2 with proximity sensors**
The input can be controlled by DC 3 wire or AC/DC 2 wire proximity sensors. For operating voltage > 24 V and usage of sensors without built-in short circuit protection a protection resistor on A1 is recommendend to reduce the inrush current. The dimension is as follows:

$R_v \approx$ operating voltage / max. switching current of sensor

The series resistor must not be selected higher than necessary.
Max. values are:

| | | | | |
|---|---|---|---|---|
| Operating voltage: | 48 V | 60 V | 110 V | 230 V |
| Series resistor $R_v$ max: | 270 Ω | 390 Ω | 680 Ω | 1.8 kΩ (1 W) |

**Instantaneous contact**
By external wire links the output function of the device can be altered from 2 delayed contacts to 1 delayed **and** 1 instantaneous contact. The instantaneous contact switches when the operating voltage is connected. To terminals X1 and X2 no other voltage potentials must be connected, as the unit might be damaged.

## Notes

**Adjustment assistance**
The flashing period of the yellow LED is 1 s ± 4% and can be used to adjust the time. Especially on the lower end of scale and for long times it is suitable as the mutiplication factors between the different time ranges are exact without tolerance.
Example:
The required time is 40 min. It has to be adjusted within the range 3 ... 300 min. The time check takes too long as several timing cycles would be necessary for a precise value.

For faster adjustment the setting is made to 0.03 ... 3 min. On this range the potentiometer should be set to 0.4 min (= 24 sec). With the right potentiometer setting the LED must show 24 flashing cycles. After that the time range is switched over to 3 ... 300 min and the setting is complete.

**Time interruption / Time adding**
With the model MK 9906N.82/500 the timing cycle can be interrupted by controlling input B1 (+) with control voltage. Removing the control signal will continue the timing cycle (time addition). When time is interrupted the yellow LED goes off.

**Control input B1**
The control input B1 (+) has to be supplied with voltage against A2. The control signal could be the same as the auxiliary/control voltage of A1 or any other voltage between 12 and 240 V AC or DC. Operating a parallel load between B1 and A2 is also possible, which allows cost saving circuits.

**Remote potentiometers**
With the variant MK 9906N.82/500 the time setting can also be made via remote potentiometer of 10 kOhms. It is connected to the terminals Z1-Z2. The corresponding potentiometer on the relay has to be set to min. If no remote potentiometer is required the terminals Z1-Z2 have to be linked.

The wires to the remote potentiometers should be installed separately from the lines with mains voltage. If this is not possible, a screened cable is recommendet where the shield is connected to Z2.
To terminals Z1 and Z2 no external voltage must be connected, as the unit might be damaged.

## Setting

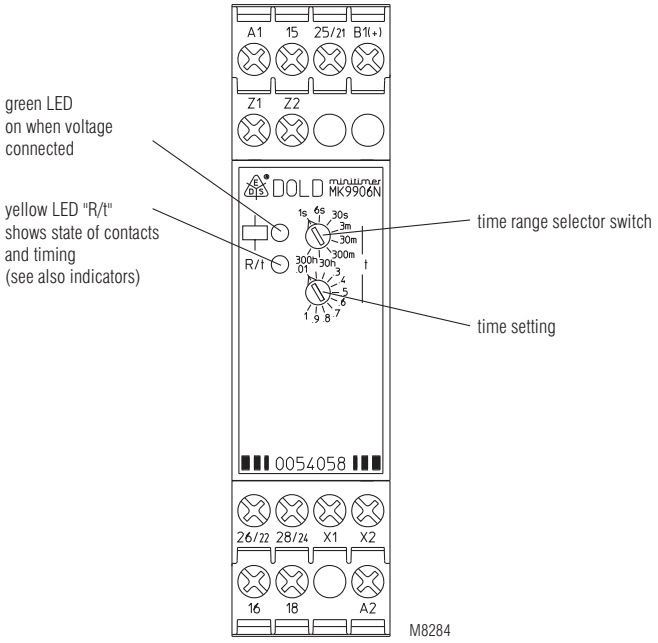


## Technical Data

**Time circuit**

| | |
|---|---|
| **Time ranges:** | 8 time ranges settable via rotational switch: |
| | 0.05 ... 1 s — 0.3 ... 30 min |
| | 0.06 ... 6 s — 3 ... 300 min |
| | 0.3 ... 30 s — 0.3 ... 30 h |
| | 0.03 ... 3 min — 3 ... 300 h |
| **Time setting t:** | continuous 1:100 on relative scale |
| **Recovery time:** | |
| at DC 24 V: | approx. 15 ms |
| at DC 240 V: | approx. 50 ms |
| at AC 230 V: | approx. 80 ms |
| **Repeat accuracy:** | ± 0.5 % of selected end of scale value + 20 ms |
| **Voltage and temperatue influence:** | ≤ 1 % with the complete operating range |

**Input**

| | | |
|---|---|---|
| **Nominal voltage $U_N$:** | AC/DC 12 ... 240 V | |
| **Voltage range:** | 0.8 ... 1.1 $U_N$ | |
| **Frequency range (AC):** | 45 ... 400 Hz | |
| **Nominal consumption** | | |
| at AC 12 V: | approx. 1.5 VA | |
| at AC 24 V: | approx. 2 VA | |
| at AC 240 V: | approx. 3 VA | |
| at DC 12 V: | approx. 1 W | |
| at DC 24 V: | approx. 1 W | |
| at DC 240 V: | approx. 1 W | |
| **Release voltage (A1/A2)** | | |
| | Delayed contact | Instantaneous contact |
| AC 50 Hz: | approx. 7.5 V | approx. 3 V |
| DC: | approx. 7 V | approx. 3.3 V |
| **Max. permitted residual current with 2-wire proximity sensor control (A1-A2)** | | |
| up to AC/DC 150 V: | AC resp. DC 5 mA | |
| up to AC/DC 264 V: | AC resp. DC 3 mA | |
| **Control voltage (B1/A2)** | | |
| MK 9906N.82/500: | AC/DC 12 ... 240 V | |
| **Voltage range (B1/A2):** | 0.8 ... 1.1 UN | |
| **Control current (B1)** | | |
| MK 9906N.82/500: range | approx. 1 mA, over complete voltage | |
| **Release voltage (B1/A2)** | | |
| MK 9906N.82/500 | | |
| AC 50 Hz: | approx. 3.5 V | |
| DC: | approx. 3 V | |

**Output**

| | | |
|---|---|---|
| **Contacts** | | |
| MK 9906N.82: | 2 changeover contacts, one programmable as instantaneous | |
| contact: | | |
| without bridge X1-X2: | 25-26-28 delayed changeover contact | |
| with bridge X1-X2: | 21-22-24 instantaneous contact at $U_N$ on A1-A2 | |
| **Contact material:** | AgNi | |
| **Measured nominal voltage:** | AC 250 V | |
| **Thermal current $I_{th}$:** | see quadratic total current limit curve (max. 4 A per contact) | |
| **Switching capacity** | | |
| to AC 15 | | |
| NO contact: | 3 A / AC 230 V | IEC/EN 60 947-5-1 |
| NC contact: | 1 A / AC 230 V | IEC/EN 60 947-5-1 |
| to DC 13: | 1 A / DC 24 V | |
| **Electrical life** | | |
| to AC 15 at 1 A, AC 230 V: | 1.5 x $10^5$ switching cycles | IEC/EN 60 947-5-1 |
| **Permissible switching frequency:** | 36 000 switching cycles / h | |
| **Short circuit strength max. fuse rating:** | 4 A gL | IEC/EN 60 947-5-1 |
| **Mechnical life:** | ≥ 30 x $10^6$ switching cycles | |

## Technical Data

### General Data

| | | |
|---|---|---|
| **Operating mode:** | Continuous operation | |
| **Temperature range** | | |
| Operation: | - 40 ... + 60 °C (higher temperature see quadratic total current limit curve) | |
| Storage: | - 40 ... + 70 °C | |
| **Relative air humidity:** | 93 % at 40 °C | |
| **Altitude:** | < 2,000 m | |
| **Clearance and creepage distances** | | |
| rated impulse voltage / pollution degree: | | |
| Input / Output: | 4 kV / 2 (basis insulation) | IEC 60 664-1 |
| Output / Output: | 4 kV / 2 (basis insulation) | IEC 60 664-1 |
| Overvoltage category: | III | |
| Insulation test voltage, type test: | 2.5 kV; 1 min | |
| **EMC** | | |
| Electrostatic discharge: | 8 kV (air) | IEC/EN 61 000-4-2 |
| HF irradiation | | |
| 80 MHz ... 1 GHz: | 20 V / m | IEC/EN 61 000-4-3 |
| 1 GHz ... 2.7 GHz: | 10 V / m | IEC/EN 61 000-4-3 |
| Fast transients: | 2 kV | IEC/EN 61 000-4-4 |
| Surge voltages between | | |
| wires for power supply: | 2 kV | IEC/EN 61 000-4-5 |
| between wire and ground: | 4 kV | IEC/EN 61 000-4-5 |
| HF-wire guided: | 10 V | IEC/EN 61 000-4-6 |
| Interference suppression: | Limit value class A*) *) The device is designed for the usage under industrial conditions (Class A, EN 55011). When connected to a low voltage public system (Class B, EN 55011) radio interference can be generated. To avoid this, appropriate measures have to be taken. | |
| **Degree of protection** | | |
| Housing: | IP 40 | IEC/EN 60 529 |
| Terminals: | IP 20 | IEC/EN 60 529 |
| **Housing:** | Thermoplastic with V0 behaviour according to UL subject 94 | |
| **Vibration resistance:** | Amplitude 0.35 mm, frequency 10 ... 55 Hz, | IEC/EN 60 068-2-6 |
| **Climate resistance:** | 20 / 060 / 04 | IEC/EN 60 068-1 |
| **Terminal designation:** | | EN 50 005 |
| **Wire connection** | | DIN 46 228-1/-2/-3/-4 |
| **Screw terminals (integrated):** | 1 x 4 mm² solid or<br>1 x 2.5 mm² stranded ferruled or<br>2 x 1.5 mm² stranded ferruled or<br>2 x 2.5 mm² solid | |
| Insulation of wires or sleeve length: | 8 mm | |
| **Plug in with screw terminals** | | |
| max. cross section for connection: | 1 x 2.5 mm² solid or<br>1 x 2.5 mm² stranded ferruled | |
| Insulation of wires or sleeve length: | 8 mm | |
| **Plug in with cage clamp terminals** | | |
| max. cross section for connection: | 1 x 4 mm² solid or<br>1 x 2.5 mm² stranded ferruled | |
| min. cross section for connection: | 0.5 mm² | |
| Insulation of wires or sleeve length: | 12 ±0.5 mm | |
| **Wire fixing:** | Plus-minus terminal screws M 3.5 box terminals with wire protection or cage clamp terminals | |
| **Fixing torque:** | max. 0.8 Nm | |
| **Mounting:** | DIN rail | IEC/EN 60 715 |
| **Weight:** | 150 g | |

### Dimensions

| | |
|---|---|
| **Width x heigth x depth** | |
| MK 9906N: | 22.5 x 90 x 97 mm |
| MK 9906N PC: | 22.5 x 111 x 97 mm |
| MK 9906N PS: | 22.5 x 104 x 97 mm |

## UL-Data

| | |
|---|---|
| **Switching capacity:** | |
| Ambient temperature 60°C: | Pilot duty B300<br>5A 250Vac G. P. |
| **Wire connection:** | 60°C / 75°C copper conductors only |
| Screw terminals fixed: | AWG 20 - 12 Sol/Str Torque 0.8 Nm |
| Plug in screw: | AWG 20 - 14 Sol Torque 0.8 Nm<br>AWG 20 - 16 Str Torque 0.8 Nm |
| Plug in cage clamp: | AWG 20 - 12 Sol/Str |

**Technical data that is not stated in the UL-Data, can be found in the technical data section.**

## Standard Type

MK 9906N.82/61 AC/DC 12 ... 240 V 0.05 s ... 300 h

| | |
|---|---|
| Article number: | 0057517 |
| • Output: | 2 changeover contacts, one programmable as instantaneous contact |
| • Nominal voltage $U_N$: | AC/DC 12 ... 240 V |
| • Time ranges: | 0.05 s ... 300 h |
| • Width: | 22.5 mm |

## Variants

| | |
|---|---|
| MK 9906N.82: | without connection facility for a remote potentiometer. |
| MK 9906N.82/500: | with connection facility for a remote potentiometer 10 kΩ to adjust the time and additional control input B1 for time interruption / time addition. |

### Ordering example for variants

MK 9906N .82 _ _ / _ _ _ /61 AC/DC 12 ... 240 V 0,05 s ... 300 h

- Time range
- Nominal voltage
- with UL-approval (Canada / USA)
- Variant, if required
- Type of terminals
  - without indication: terminal blocks fixed, with screw terminals
  - PC (plug in cage clamp): pluggable terminal blocks with cage clamp terminals
  - PS (plug in screw): pluggable terminal blocks with screw terminals
- Contacts
- Type

## Options with Pluggable Terminal Blocks

Screw terminal
(PS/plugin screw)

Cage clamp
(PC/plugin cage clamp)

## Notes

Removing the terminal blocks with cage clamp terminals

1. The unit has to be disconnected.
2. Insert a screwdriver in the side recess of the front plate.
3. Turn the screwdriver to the right and left.
4. Please note that the terminal blocks have to be mounted on the belonging plug in terminations.

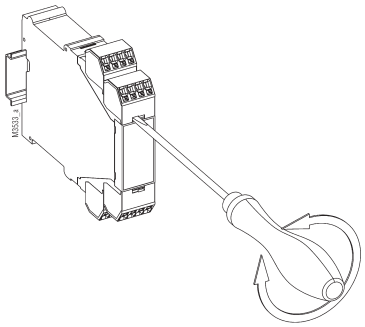

## Accessories

AD 3: External potentiometer 10 kΩ
Article number: 0028962

The external potentiometer is used for remote setting of the time delay. The internal potentiometer of the timer must be set to min. time delay.

Degree of protection front side: IP 60

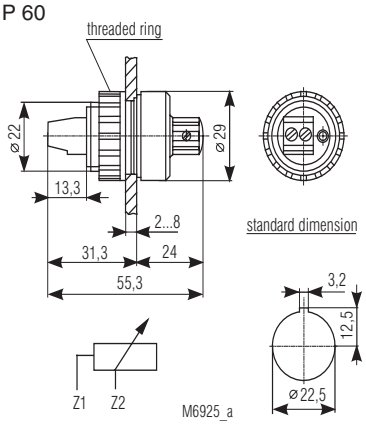


## Characteristics

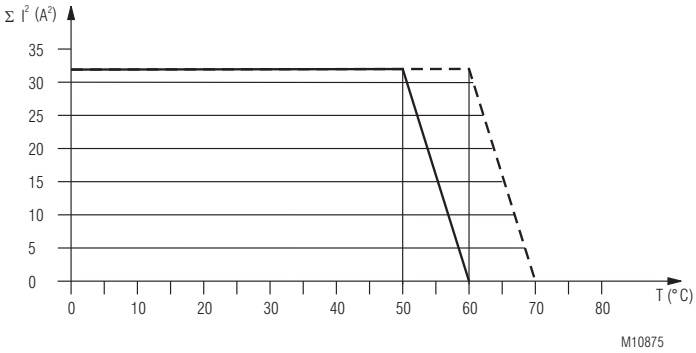


Quadratic total current limit curve

## Connection Examples

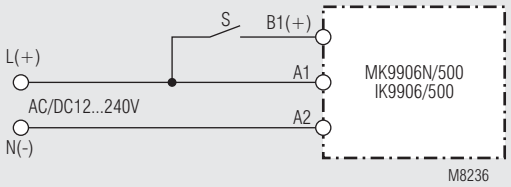


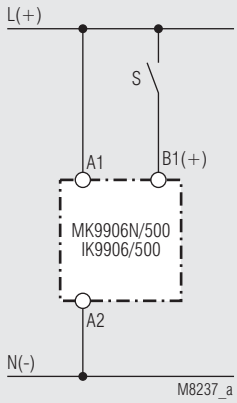


Control with parallel connected load

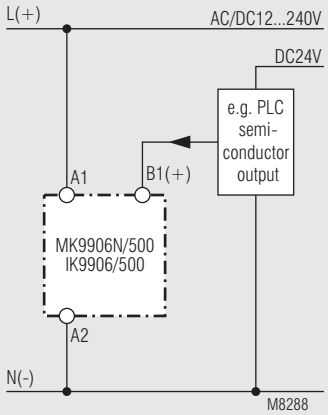


Connection with 2 different control voltages

# MINITIMER
## Timer, On delayed
## MK 9906N/600

DOLD

0272762

### Function Diagram

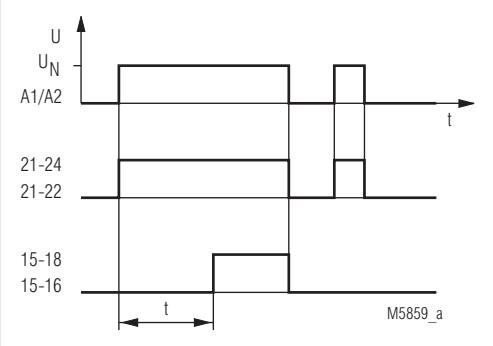


### Circuit Diagrams

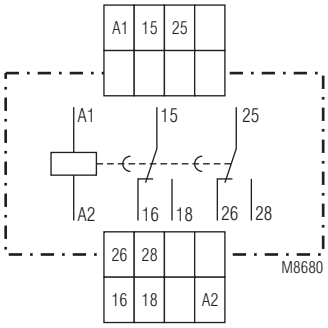


MK 9906N.82/600

**Your Advantages**
- For different time ranges
- Simplified storage
- High accuracy

**Features**
- According to IEC/EN 61 812-1
- Delay from 0.05 s ... 100 h
- Repeat accuracy ≤ ± 0.5 %
- Setting on absolute scale
- LED indicators for operation and state of contacts
- Controlled with 2-wire initiators
- 2 changeover contacts
- Wire connection: also 2 x 1.5 mm² stranded ferruled, or 2 x 2.5 mm² solid DIN 46 228-1/-2/-3/-4
- As option with pluggable terminal blocks for easy exchange of devices
  - with screw terminals
  - or with cage clamp terminals
- Width: 22.5 mm

### Approvals and Markings

AE68

### Application

Time-dependent controllers

### Indications

| | |
|---|---|
| upper LED: | on when supply connected |
| lower LED: | on, when corresponding output relay is active (contact 15 - 18 closed) |

### Technical Data

**Time circuit**

| | | |
|---|---|---|
| **Time ranges:** | 0.05 ... 1 s | 0.5 ... 10 min |
| | 0.15 ... 3 s | 1.5 ... 30 min |
| | 0.5 ... 10 s | 3 ... 60 min |
| | 1.5 ... 30 s | 0.15 ... 3 h |
| | 3 ... 60 s | 0.5 ... 10 h |
| | 5 ... 100 s | 1.5 ... 30 h |
| | 15 ... 300 s | 5 ... 100 h |

| | |
|---|---|
| **Time setting:** | Stepless, setting on absolute scale |
| **Recovery time** | |
| tw 50 / 100: | 40 ms |
| **Repeat accuracy:** | ≤ ± 0.5 % end of scale value |
| **Voltage influence:** | ≤ 1 % |
| **Temperature influence:** | < 0.1 % / K |

**Input**

| | | | |
|---|---|---|---|
| **Nominal voltage $U_N$:** | AC/DC 24 V, AC 110 ... 127 V AC/DC 24 V, AC 230 ... 240 V | | |
| **Voltage range:** | AC 0.8 ... 1.1 $U_N$ DC 0.9 ... 1.25 $U_N$ | | |
| **Nominal consumption:** | AC 230 V | DC 24 V | DC 42 V |
| | 8.5 VA | 1 W | 1 W |
| **Nominal frequency:** | 50 / 60 Hz | | |
| **Frequency range:** | ± 5 % $f_N$ | | |
| **Release voltage:** | 15 % $U_N$ | | |
| **Permissible residual current:** | 5 mA | | |

## Technical Data

### Output

| | | |
|---|---|---|
| **Contacts**: | 2 changeover contacts | |
| **Release time:** | 30 ms | |
| **Thermal current $I_{th}$:** | 5 A | |
| **Switching capacity** | | |
| to AC 15 | | |
| NO contact: | 3 A / AC 230 V | IEC/EN 60 947-5-1 |
| NC contact: | 2 A / AC 230 V | IEC/EN 60 947-5-1 |
| **Electrical life** | | |
| to AC 15 at 3 A, AC 230 V: | 5 x $10^5$ switch. cycles | IEC/EN 60 947-5-1 |
| **Permissible switching frequency:** | 6 000 switching cycles / h | |
| **Short circuit strength** | | |
| **max. fuse rating:** | 6 A gL | IEC/EN 60 947-5-1 |
| **Mechnical life:** | > 30 x $10^6$ switching cycles | |

### General Data

| | | |
|---|---|---|
| **Operating mode:** | Continuous operation | |
| **Temperature range**: | - 20 ... + 60 °C | |
| **Clearance and creepage distances** | | |
| rated impulse voltage / pollution degree: | | |
| Input / Output: | 4 kV / 2 | IEC 60 664-1 |
| **EMC** | | |
| Electrostatic discharge: | 8 kV (air) | IEC/EN 61 000-4-2 |
| HF irradiation: | 10 V / m | IEC/EN 61 000-4-3 |
| Fast transients: | 4 kV | IEC/EN 61 000-4-4 |
| Surge voltage between | | |
| wires for power supply: | 1 kV | IEC/EN 61 000-4-5 |
| between wire and ground: | 2 kV | IEC/EN 61 000-4-5 |
| HF-wire guided: | 10 V | IEC/EN 61 000-4-6 |
| Interference suppression: | Limit value class B | EN 55 011 |
| **Degree of protection** | | |
| Housing: | IP 40 | IEC/EN 60 529 |
| Terminals: | IP 20 | IEC/EN 60 529 |
| **Housing:** | Thermoplastic with V0 behaviour according to UL subject 94 | |
| **Vibration resistance:** | Amplitude 0.35 mm, Frequency 10 ... 55 Hz, | IEC/EN 60 068-2-6 |
| **Climate resistance:** | 20 / 060 / 04 | IEC/EN 60 068-1 |
| **Terminal designation:** | EN 50 005 | |
| **Wire connection** | | DIN 46 228-1/-2/-3/-4 |
| **Screw terminals (integrated):** | 1 x 4 $mm^2$ solid or<br>1 x 2.5 $mm^2$ stranded ferruled (isolated)<br>or<br>2 x 1.5 $mm^2$ stranded ferruled (isolated)<br>or<br>2 x 2.5 $mm^2$ solid | |
| Insulation of wires or sleeve length: | 8 mm | |
| **Plug in with screw terminals** | | |
| max. cross section for connection: | 1 x 2.5 $mm^2$ solid or<br>1 x 2.5 $mm^2$ stranded ferruled (isolated) | |
| Insulation of wires or sleeve length: | 8 mm | |
| **Plug in with cage clamp terminals** | | |
| max. cross section for connection: | 1 x 4 $mm^2$ solid or<br>1 x 2.5 $mm^2$ stranded ferruled (isolated) | |
| min. cross section for connection: | 0.5 $mm^2$ | |
| Insulation of wires or sleeve length: | 12 $^{\pm 0,5}$ mm | |
| **Wire fixing:** | Plus-minus terminal screws M 3.5<br>box terminals with wire protection or cage clamp terminals | |
| **Mounting:** | DIN rail | IEC/EN 60 715 |
| **Weight:** | 140 g | |

### Dimensions

| | |
|---|---|
| **Width x heigth x depth** | |
| MK 9906N: | 22.5 x 90 x 97 mm |
| MK 9906N PC/600: | 22.5 x 111 x 97 mm |
| MK 9906N PS/600: | 22.5 x 104 x 97 mm |

## Standard Type

MK 9906N.82/600 AC 220 ... 240 V 1.5 ... 30 s

| | |
|---|---|
| Article number: | 0056017 |
| • Output: | 2 Wechsler |
| • Nominal voltage $U_N$: | AC 220 ... 240 V |
| • Width: | 22.5 mm |

## Variants

| | |
|---|---|
| MK 9906N.82/608: | DC 24 V, 2 changeover contacts<br>inrush current:<br>≤ 100 mA, typ. at DC 24 V: 80 mA<br>recovery time:<br>$t_w$ 50/100: ≤ 20 ms<br>(suitable to be controlled by reed contacts) |

### Ordering example for variants

MK 9906N .82 _ _ / 6_ _ AC 230 ... 240 V 50/60 Hz 100 s

- Time range max. value
- Nominal frequency
- Nominal voltage
- Variant, if required
- Type of terminals
  without indication:
  terminal blocks fixed, with screw terminals
  PC (plug in cageclamp):
  pluggable terminal blocks with cage clamp terminals
  PS (plug in screw):
  pluggable terminal blocks with screw terminals
- Contacts
- Type

## Options with Pluggable Terminal Blocks

Screw terminal
(PS/plugin screw)

Cage clamp
(PC/plugin cage clamp)

## Notes

Removing the terminal blocks with cage clamp terminals

1. The unit has to be disconnected.
2. Insert a screwdriver in the side recess of the front plate.
3. Turn the screwdriver to the right and left.
4. Please note that the terminal blocks have to be mounted on the belonging plug in terminations.

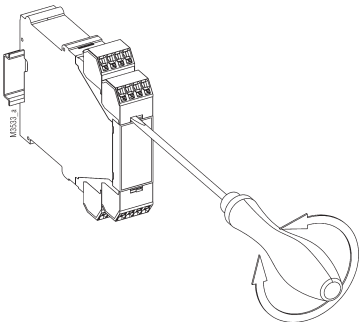

# MINITIMER
## Timer, Delay On Make
## MK 9908

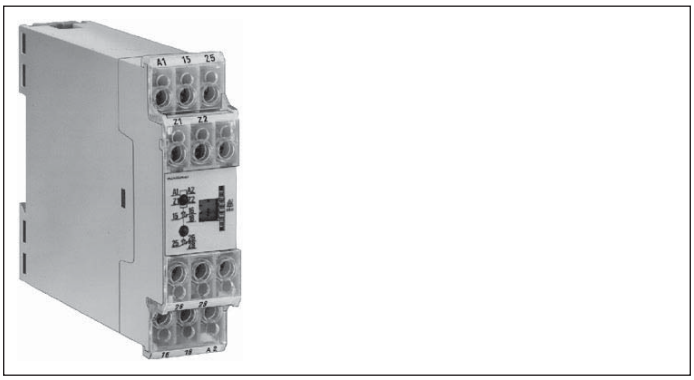


- According to IEC/EN 61 812-1
- Delay up to 300 s
- Repeat accuracy < ± 1 %
- Remote potentiometer connection
- Control with 2-wire-initiators possible
- LED-indication for supply and contact position
- 2 changeover contacts
- Width 22.5 mm

### Function Diagram

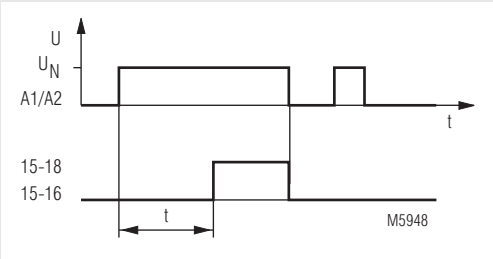


### Circuit Diagram

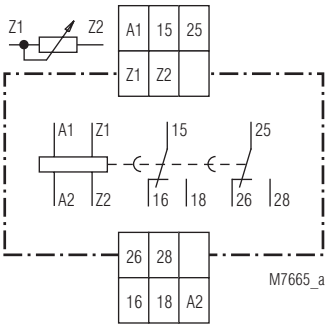


MK 9908.82

### Approvals and Markings

CE

### Application

Time dependent controls

### Indication

| | |
|---|---|
| upper LED: | on when operating voltage applied |
| lower LED: | on when output relay activated |

### Technical Data

**Time circuit**

| | |
|---|---|
| **Time ranges:** | 0.05 ... 1 s<br>0.15 ... 3 s<br>0.5 ... 10 s<br>1.5 ... 30 s<br>5 ... 100 s<br>15 ... 300 s |
| **Time setting:** | stepless on absolute scale<br>remote setting by external potentiometer |
| **Recovery time** | |
| tw 50 / 100: | < 200 ms / < 100 ms |
| **Repeat accuracy:** | < ± 1 % of the max. scale value |
| **Voltage influence:** | ≤ 2 % at 0.8 ... 1.1 $U_N$ |
| **Temperature influence:** | ≤ 0.3 % / K |

**Input**

| | |
|---|---|
| **Nominal voltage $U_N$:** | AC 24, 42, 110 ... 127, 220 ... 240 V<br>DC 24 V with polarity protection |
| **Voltage range:** | 0.8 ... 1.1 $U_N$ at AC |
| **Permissible residual current:** | 5 mA |
| **Nominal consumption** | |
| AC 230 V: | 7 VA |
| **Nominal frequency:** | 50 / 60 Hz |
| **Frequency range:** | ± 5 % $f_N$ |

## Technical Data

### Output

| | | |
|---|---|---|
| **Contacts:** | 2 changeover contacts delayed | |
| **Release time of the contacts:** | approx. 40 ms | |
| **Thermal current $I_{th}$:** | 5 A | |
| **Switching capacity** | | |
| to AC 15: | | |
| NO contact: | 3 A / AC 230 V | IEC/EN 60 947-5-1 |
| NC contact: | 2 A / AC 230 V | IEC/EN 60 947-5-1 |
| **Electrical life** | | IEC/EN 60 947-5-1 |
| to AC 15 at 3 A, AC 230 V: | $5 \times 10^5$ switching cycles | |
| **Permissible switching frequency:** | 6 000 switching cycles / h | |
| **Short circuit strength** | | |
| **max. fuse rating:** | 6 A gL | IEC/EN 60 947-5-1 |
| **Mechanical life:** | $30 \times 10^6$ switching cycles | |

### General Data

| | | |
|---|---|---|
| **Operating mode:** | Continuous operation | |
| **Temperature range:** | - 20 ... + 60°C | |
| **Clearance and creepage distances** | | |
| rated impulse voltage / pollution degree: | 4 kV / 2 | IEC 60 664-1 |
| **EMC** | | |
| Electrostatic discharge: | 8 kV (air) | IEC/EN 61 000-4-2 |
| HF-irradiation: | 10 V/m | IEC/EN 61 000-4-3 |
| Fast transients: | 4 kV | IEC/EN 61 000-4-4 |
| Surge voltages between | | |
| wires for power supply: | 2 kV | IEC/EN 61 000-4-5 |
| between wire and ground: | 4 kV | IEC/EN 61 000-4-5 |
| HF-wire guided: | 10 V | IEC/EN 61 000-4-6 |
| Interference suppression: | Limit value class B | EN 55 011 |
| **Degree of protection** | | |
| Housing: | IP 40 | IEC/EN 60 529 |
| Terminals: | IP 20 | IEC/EN 60 529 |
| **Housing:** | Thermoplast with V0-behaviour according to UL subj. 94 | |
| **Vibration resistance** | Amplitude 0.35 mm frequency 10 ... 55 Hz | IEC/EN 60 068-2-6 |
| **Climate resistance:** | 20 / 060 / 04 | IEC/EN 60 068-1 |
| **Terminal designation:** | EN 50 005 | |
| **Wire connection:** | 2 x 1.5 mm² solid or 2 x 1.0 mm² stranded wire with sleeve DIN 46 228-1/-2/-3/-4 | |
| **Wire fixing:** | Flat terminals with self-lifting clamping piece | IEC/EN 60 999-1 |
| **Mounting:** | DIN rail | IEC/EN 60 715 |
| **Weight:** | 150 g | |

### Dimensions

**Width x height x depth:** 22.5 x 82 x 99 mm

## Standard Type

MK 9908 AC 220 ... 240 V 0.5 ... 10 s

| | | |
|---|---|---|
| Article number: | 0044923 | stock item |
| • Output: | 2 changeover contacts, delayed | |
| • Nominal voltage $U_N$: | AC 220 ... 240 V | |
| • Time range: | 0.5 ... 10 s | |
| • Width: | 22.5 mm | |

## Ordering example

MK 9908 / _ _ AC 220 ... 240 V 50 / 60 Hz 15 ... 300 s

- Time range
- Nominal frequency
- Nominal voltage
- Variant, if required
- Type

## Accessories

ET 4752-143: Making plate
Article number: 0043203

AD 3: External potentiometers

| | | |
|---|---|---|
| 0.05 ... | 1 s | 1 MΩ |
| 0.15 ... | 3 s | 2.2 MΩ |
| 0.5 ... | 10 s | 10 MΩ |
| 1.5 ... | 30 s | 20 MΩ |
| 5 ... | 100 s | 20 MΩ |
| 15 ... | 300 s | 20 MΩ |

Degree of protection front side: IP 60

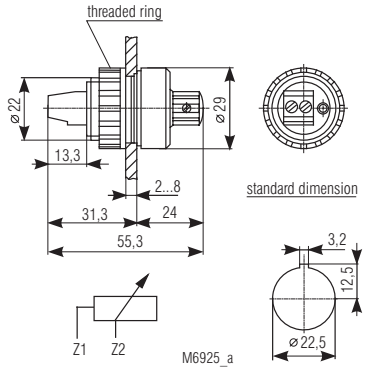

# MINITIMER
## Timer, On Delayed
## AA 7512

**Your Advantage**
- Non sensitive to electromagnetical influence by pneumatic time element

**Features**
- According to IEC/EN 61 812-1
- Delay up to 180 s
- Repeat accuracy < ± 5 %
- 1 changeover contact delayed, 1 changeover contact without delay
- Width 45 mm

### Function Diagram

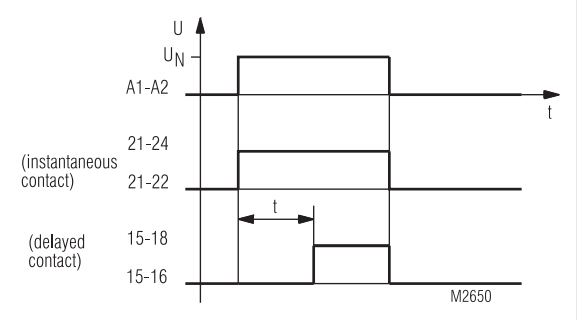


### Circuit Diagram

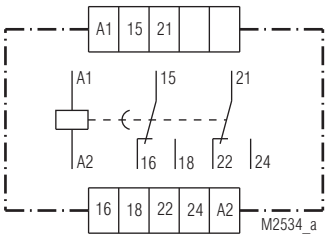


AA 7512.32

### Approvals and Markings

CE

### Application

Time dependent controls

### Function

With the on-delayed timer AA 7512 the delay is achieved by a pair of bellows that is compressed by a magnet system. With an adjustable regulating system the time for the expansion of the bellows is defined. The bellow then operates the switch contacts.

### Notes

For the DC-version the mounting distance should not be smaller than 8 mm.

### Technical Data

**Time circuit**

| | | |
|---|---|---|
| **Time ranges:** | 0.2 ... 30 s | 0.2 ... 180 s |
| **Time setting:** | infinitely | |
| **Repeat accuracy:** | ≤ ± 5 % of the final range value | |
| **Min. transition time:** | 25 ms | |
| **Temperature influence:** | 0.5 % / K<br>under certain circumsances, variation and temperature errors can be added. | |

**Input**

| | | |
|---|---|---|
| **Nominal voltage $U_N$:** | AC 24, 42, 110, 127, 230, 240 V<br>50 or 60 Hz | |
| **Voltage range:** | AC 0.85 ... 1.1 $U_N$<br>DC 0.8 ... 1.1 $U_N$ | |
| **Nominal consumption:** | Initial position<br>22 VA<br>5.5 W | Active position<br>7 VA<br>5.5 W |
| **Nominal frequency:** | 50 Hz | |

## Technical Data

**Output**

**Contacts**

| | | |
|---|---|---|
| AA 7512.32: | 1 changeover contact, without delay<br>1 changeover contact, delayed | |
| **Operate time of contacts:** | < 50 ms | |
| **Release time of contacts:** | < 25 ms | |
| **Thermal current $I_{th}$:** | 4 A | |
| **Nominal breaking capacity** | AC 110 V | AC 230 V |
| cos φ 1 ... 0.7: | 2 A | 2 A |
| cos φ 0.4: | 1 A | 1 A |
| | DC 110 V | DC 220 V |
| ohmic: | 0.25 A | 0.25 A |
| inductive: | 0.03 A | 0.02 A |
| **Electrical life:** | 1.2 x $10^6$ switching cycles<br>1 500 switches/h<br>at 30 % of the switching capacity<br>0.8 x $10^6$ switching cycles<br>1 000 switches/h<br>at 50 % of the switching capacity<br>0.3 x $10^6$ switching cycles<br>500 switches/h<br>at 100 % of the switching capacity | |
| **Permissible switching frequency:** | 1 500 switching cycles / h | |
| **Short circuit strength max. fuse rating:** | 2 A gL | IEC/EN 60 947-5-1 |
| **Mechanical life:** | > 3 x $10^6$ switching cycles | |

**General Data**

| | | |
|---|---|---|
| **Operating mode:** | Continuous operation | |
| **Temperature range:** | - 10 ... + 55 °C | |
| **Clearance and creepage distances** | | |
| rated impulse voltage / pollution degree: | 4 kV / 2 | IEC 60 664-1 |
| **EMC** | | |
| Electrostatic discharge: | 8 kV (air) | IEC/EN 61 000-4-2 |
| HF-irradiation: | 10 V/m | IEC/EN 61 000-4-3 |
| Fast transients: | 2 kV | IEC/EN 61 000-4-4 |
| Surge voltages between | | |
| wires for power supply: | 1 kV | IEC/EN 61 000-4-5 |
| between wire and ground: | 2 kV | IEC/EN 61 000-4-5 |
| HF-wire guided: | 10 V | IEC/EN 61 000-4-6 |
| Interference suppression: | Limit value class B | EN 55 011 |
| **Degree of protection** | | |
| Housing: | IP 40 | IEC/EN 60 529 |
| Terminhhals: | IP 10 | IEC/EN 60 529 |
| **Housing:** | Thermoplast with V0-behaviour according to UL subject 94 | |
| **Vibration resistance:** | Amplitude 0.35 mm<br>frequency 10 ... 55 Hz | IEC/EN 60 068-2-6 |
| **Climate resistance:** | The device is only to be used in dry rooms, in closed switch cabinets or switch boxes. | |
| **Terminal arrangement:** | DIN 46 199-5 | |
| **Terminal designation:** | EN 50 005 | |
| **Wire connection:** | 2 x 2.5 $mm^2$ solid or<br>2 x 1.5 $mm^2$ stranded wire with sleeve<br>DIN 46 228-1/-2/-3/-4 | |
| **Wire fixing:** | Flat terminals with self-lifting clamping piece | IEC/EN 60 999-1 |
| **Fixing torque:** | 0.8 Nm | |
| **Mounting:** | DIN rail | IEC/EN 60 715 |
| **Weight:** | | |
| AC: | 270 g | |
| DC: | 310 g | |

**Dimensions**

| | |
|---|---|
| **Width x height x depth:** | 45 x 77 x 124 mm |

## Standard Type

| | |
|---|---|
| AA 7512.32 AC 230 V 50 Hz 0.2 ... 30 s | |
| Article number: | 0009429 |
| • Output: | 1 changeover contact, instantaneous<br>1 changeover contact, delayed |
| • Nominal voltage $U_N$: | AC 230 V |
| • Time range: | 0.2 ... 30 s |
| • Width: | 45 mm |

## Variant

| | |
|---|---|
| AA 7512.32/001: | DC-version, as option:<br>DC 12, 24, 42, 48, 110, 220 V,<br>DC 12 ... 220 V |

**Ordering example for variant**

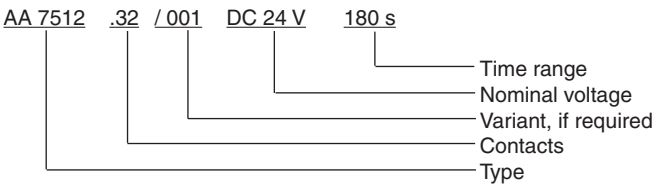

# MINITIMER
## Timer, On Delayed
## AA 7610, EC 7610, EF 7610, EH 7610

0258303

AA 7610

EC 7610

EF 7610

EH 7610

- According to IEC/EN 61 812-1
- Delay up to 60 h
- Repeat accuracy ≤ ± 0.5 %
  (≤ ± 1 % at range 6 s)
- Time display
- Delayed and instantaneous contact
- As option no-voltage safe version
- AA 7610: 45 mm
  EC 7610: front surface 48 x 72 mm
  EF 7610: front surface 72 x 72 mm
  EH 7610: front surface 96 x 96 mm

### Approvals and Markings

### Application

Time dependent controls

### Indications

| | |
|---|---|
| Time display: | via red pointer at device-scale |
| Switch position display: | via sign |

### Function Diagram

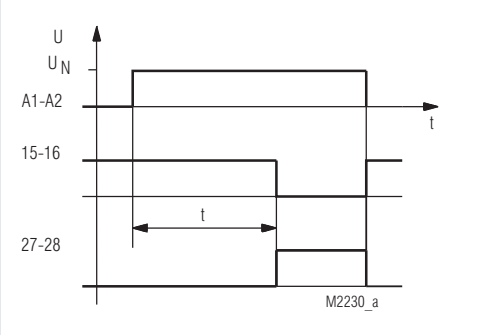

AA 7610.21

### Function Diagrams

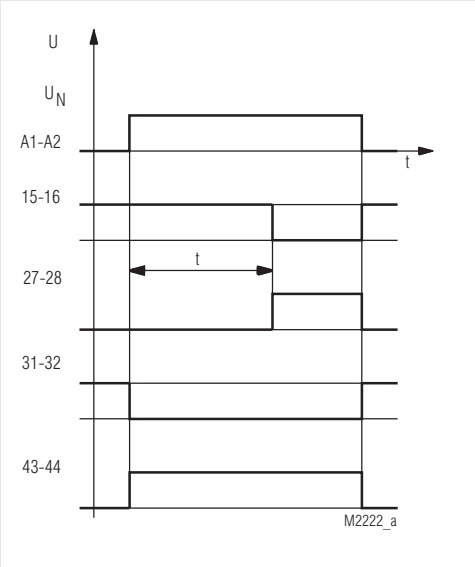

EF 7610.24

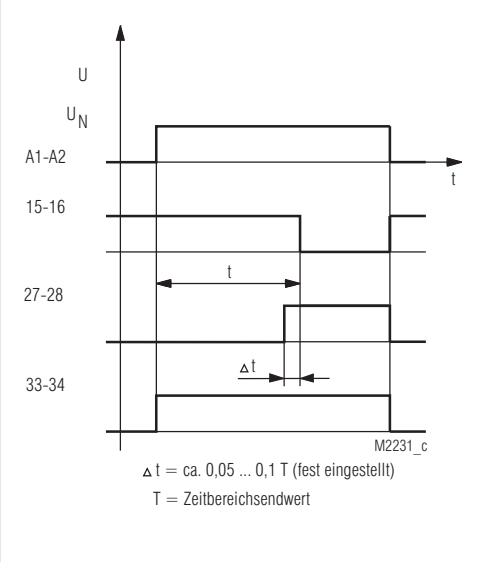

AA 7610.22/034

## Circuit Diagrams

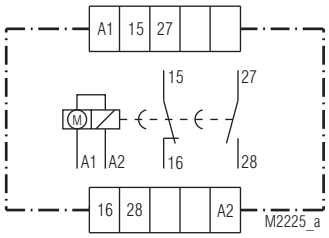


AA 7610.21

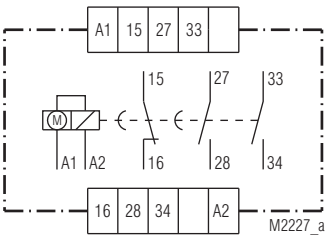


AA 7610.22/034

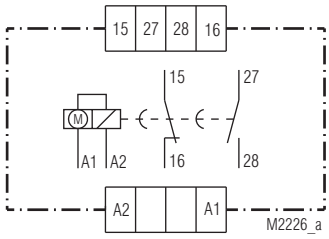


EC 7610.21

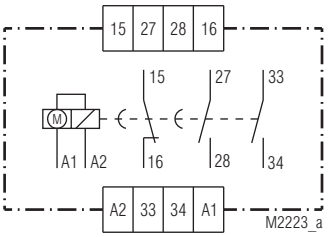


EC 7610.22/034

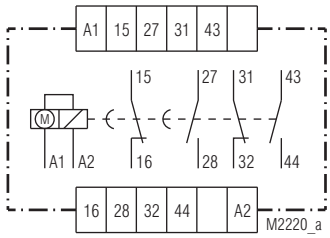


EF 7610.24

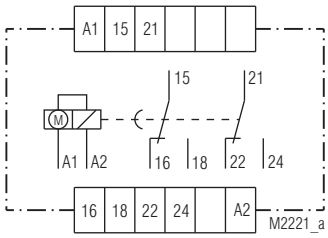


EF 7610.32

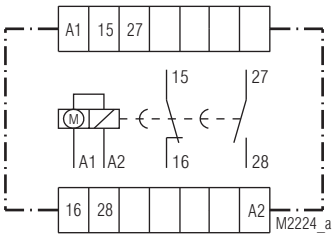


EH 7610.21

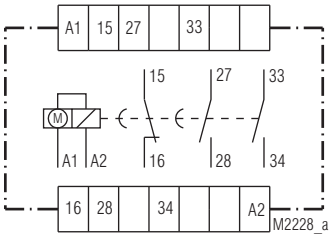


EH 7610.22/034

## Technical Data

**Time circuit**

| | |
|---|---|
| **Time ranges:** | 0.2 ... 6 s |
| | 2 ... 60 s |
| | 0.2 ... 6 min |
| | 2 ... 60 min |
| | 0.2 ... 6 h |
| | 2 ... 60 h |
| **Time setting:** | infinite via black setting pointer on absolute scale |
| **Recovery time:** | < 150 ms |
| **Repeat accuracy:** | < ± 0.5 % of the max. scale value (< ± 1 % at range 6 s) |

**Input**

| | |
|---|---|
| **Nominal voltage $U_N$:** | AC 24, 110, 127, 230, 240 V |
| **Voltage range:** | 0.8 ... 1.1 $U_N$ |
| **Nominal consumption:** | 5 VA |
| **Nominal frequency:** | 50 / 60 Hz |
| **Frequency range:** | ± 5 % |

**Output**

**Contacts**

| | |
|---|---|
| AA 7610.21, EC 7610.21 u. EH 7610.21: | 1 NC contact, delayed<br>1 NO contact, delayed |
| EF 7610.24: | 1 NC contact, delayed<br>1 NO contact, delayed<br>1 NC contact, instantaneous<br>1 NO contact, instantaneous |
| EF 7610.32: | 1 C/O contact, delayed<br>1 C/O contact, instantaneous |
| **Operate time of contacts:** | < 35 ms |
| **Release time:** | < 60 ms |
| **Thermal current $I_{th}$:** | 4 A<br>(10 A at 20°C and $U_N$) |
| **Switching capacity** | |
| to AC 15: | 3 A / AC 230 V IEC/EN 60 947-5-1 |
| **Electrical life** | IEC/EN 60 947-5-1 |
| to AC 15 at 3 A, AC 230 V: | 1 x $10^5$ switching cycles |
| to AC 15 at 1 A, AC 230 V: | 5 x $10^5$ switching cycles |
| **Permissible switching frequency:** | 3 000 switching cycles / h |
| **Short circuit strength max. fuse rating:** | 10 A gL IEC/EN 60 947-5-1 |
| **Mechanical life:** | > 30 x $10^6$ switching cycles or > 15 000 h |

## Technical Data

**General Data**

| | | |
|---|---|---|
| **Operating mode:** | Continuous operation | |
| **Temperature range:** | - 20 ... + 55°C | |
| **Clearance and creepage distances** | | |
| rated impulse voltage / pollution degree: | 4 kV / 2 | IEC 60 664-1 |
| **EMC** | | |
| Electrostatic discharge: | 8 kV (air) | IEC/EN 61 000-4-2 |
| HF irradiation: | 10 V/m | IEC/EN 61 000-4-3 |
| Fast transients: | 4 kV | IEC/EN 61 000-4-4 |
| Surge voltages between | | |
| wires for power supply: | 2 kV | IEC/EN 61 000-4-5 |
| between wire and ground: | 4 kV | IEC/EN 61 000-4-5 |
| HF-wire guided: | 10 V | IEC/EN 61 000-4-6 |
| Interference suppression: | Limit value class B | EN 55 011 |
| **Degree of protection:** | | IEC/EN 60 529 |
| EC 7610, EF 7610, EH 7610: | Housing -front side: IP 40<br>Housing: IP 30<br>Klemmen: IP 10 | |
| AA 7610: | Housing: IP 40<br>Terminals: IP 20 | |
| **Housing:** | Thermoplast with V0-behaviour according to UL Subject 94 | |
| **Vibration resistance:** | Amplitude 0.35 mm frequency 10...55Hz, | IEC/EN 60 068-2-6 |
| **Climate resistance:** | 20 / 055 / 04; A/B/C | IEC/EN 60 068-1 |
| **Terminal designation:** | EN 50 005 | |
| **Wire connection:** | 2 x 2.5 $mm^2$ solid or<br>2 x 1.5 $mm^2$ stranded wire with sleeve<br>DIN 46 228-1/-2/-3/-4 | |
| **Wire fixing:** | Flat terminals with self-lifting clamping piece | IEC/EN 60 999-1 |
| **Fixing torque:** | 0.8 Nm | |
| **Mounting** | | |
| AA 7610: | DIN rail | IEC/EN 60 715 |
| **Flush mounting** | | |
| EC 7610, EF 7610, EH 7610: | 2 clamps with screws | |
| **Weight:** | | |
| AA 7610: | 320 g | |
| EC 7610: | 500 g | |
| EF 7610: | 400 g | |
| EH 7610: | 460 g | |

**Dimensions**

| | |
|---|---|
| **Width x height x depth** | |
| AA 7610: | 45 x 77 x 125 mm |
| EC 7610: | 48 x 72 x 120 mm |
| EF 7610: | 72 x 72 x 128 mm |
| EH 7610: | 96 x 96 x 138 mm |
| **Front panel cut-out** | |
| EC 7610: | 44 x 67 mm |
| EF 7610: | 67 x 67 mm |
| EH 7610: | ø $91^{+1}$ mm |

## Standard Type

AA 7610.21 AC 230 V 50/60 Hz 60 min

| | | |
|---|---|---|
| Article number: | 0000661 | stock item |
| • Output: | 1 NC contact, delayed<br>1 NO contact, delayed | |
| • Nominal voltage $U_N$: | AC 230 V | |
| • Time range: | 2 ... 60 min | |
| • Width: | 45 mm | |

## Variants

| | |
|---|---|
| AA 7610.22/034: | According to VDE 0116<br>with pre contact: delayed, closing |
| EC 7610.22/034: | According to VDE 0116<br>with pre contact: delayed, closing |
| EF 7610.32/100: | no-voltage safe |
| EH 7610.22/034: | According to VDE 0116<br>with pre contact: delayed, closing |

**Ordering example for variants**

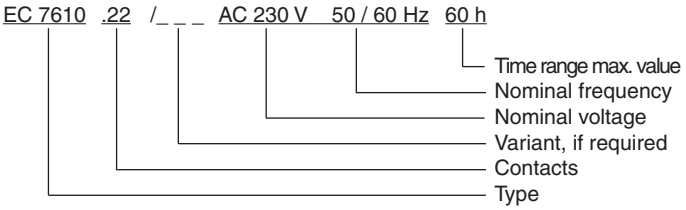


## Accessories

**for EC 7610:**

| | |
|---|---|
| ZS 700.06: | Lockable cover<br>Article number: 0004057 |
| ET 7001.407.034: | Plug-in-socket for EC 7610.21<br>Article number: 0004072 |

**for EF 7610:**

| | |
|---|---|
| ZS 700.07: | Lockable cover<br>Article number: 0004058 |
| ET 7616-0-22: | Sealing ring for sealing<br>at the front side<br>Article number: 0045909 |

# MINITIMER
## Timer, On Delayed
## AA 7616, EC 7616, EF 7616, EH 7616

0227769

AA 7616

EC 7616

EF 7616

EH 7616

- According to IEC/EN 61 812-1
- Delay up to 60 h
- 6 switchable time ranges, adjustable on front side
- Repeat accuracy ≤ ± 0.5 % (≤ ± 1 % for ranges 3 s and 6 s)
- Time lapse display
- Switching position display (except for EH 7616)
- With instantaneous contact
- Available no-voltage safe
- EF 7616: front side, protected against beam water, IP 65
- AA 7616: width 45 mm
  EC 7616: front surface 48 x 72 mm
  EF 7616: front surface 2 x 72 mm
  EH 7616: front surface 96 x 96 mm

### Approvals and Markings

CE

### Application

Time dependent controls

### Function

**Quick start:**
For short times, the quick start is recommendable for a higher repeat accuracy. Here the version AA 7616.32 is necessary. The terminals A1-A2 always remain at nominal voltage (synchronous motor is continuously operating). Time elapse starts when connecting nominal voltage to B1-B2
**Frequency selection:**
The frequency change-over 50/60Hz is done by moving a switch on the back side of the device with a screw driver
**Timer AA 7616.__/100, EC 7616.__/100, EF 7616.__/100, EH 7616.__/100 delay on make, no-voltage save**
When energizing the clutch it will be locked by a barrier, so that in case of a voltage loss. The already expired time remains stored; also the non-delayed contacts remain in the closed position. After elapse of the set time, the barrier will be opened and the delayed contacts will be actuated. If the set-time should start again after a stop of the time lapse, the time setting in the no-voltage condition has to be turned down to 0 and back again to the pre-set time value.

### Function Diagrams

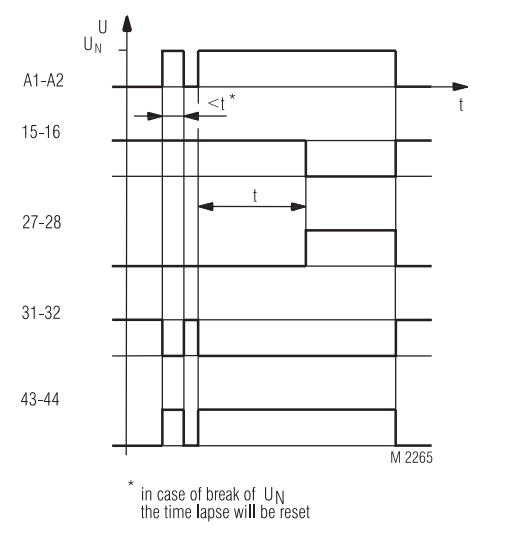


AA 7616.24

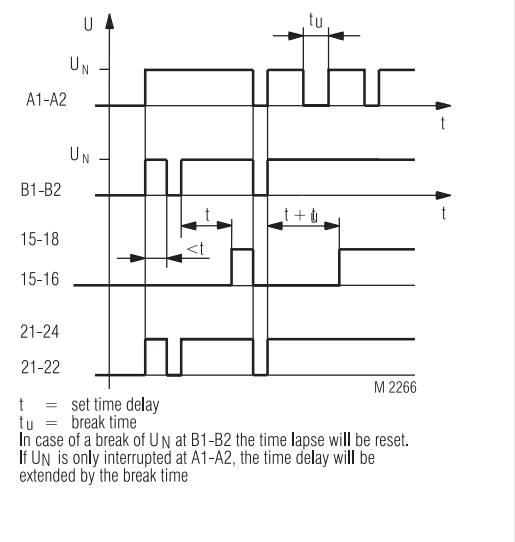


AA 7616.32

## Function Diagrams

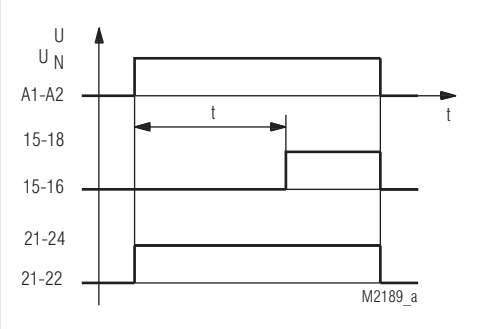


EC 7616.32

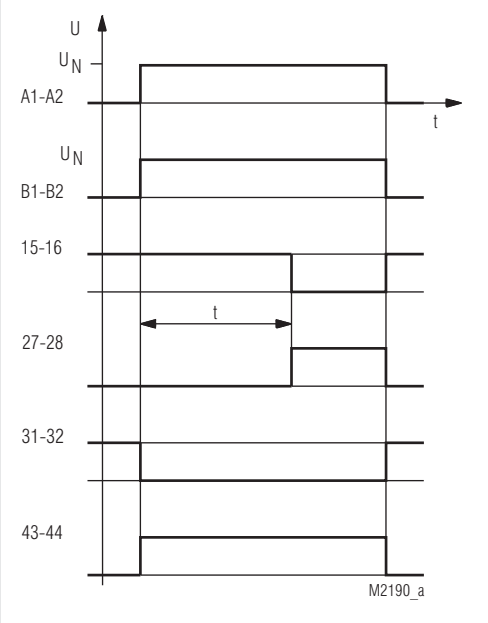


EF 7616.24, EH 7616.24

## Circuit Diagrams

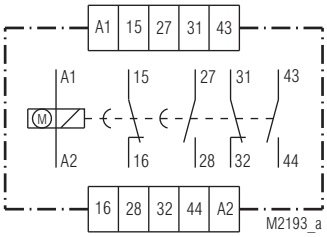


AA 7616.24

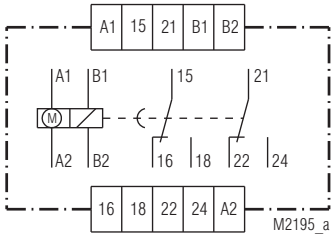


AA 7616.32

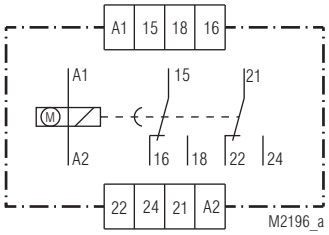


EC 7616.32

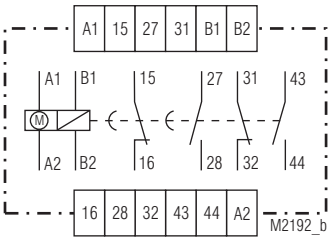


EF 7616.24

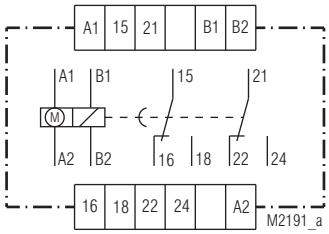


EF 7616.32

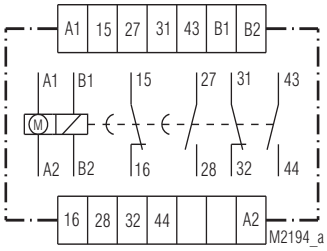


EH 7616.24

## Indication

| | |
|---|---|
| Time display: | via red pointer at device-scale |
| Red sign: | visible, when NO contacts closed (not for EH 7616) |

## Technical Data

### Time circuit

| | |
|---|---|
| **Time range:** | 6-range-versions<br>0.15 ... 3 s 1.5 ... 30 s 15 ... 300 s<br>0.4 ... 10 s 4 ... 100 s 40 ...1000 s<br>or<br>0.15 ... 3 s 0.15 ... 3 min 0.15 ... 3 h<br>1.5 ...30 s 1.5 ...30 min 1.5 ... 30 h<br>or<br>0.2 ... 6 s 0.2 ... 6 min 0.2 ... 6 h<br>2 ...60 s 2 ...60 min 2 ... 60 h |
| **Time setting:** | infinite via black (white) setting pointer on absolute scale |
| **Recovery time:** | 150 ms |
| **Repeat accuracy:** | ≤ ± 0.5 % of the max. scale value (for 3 and 6 s ≤ ± 1 %) |
| EH 7616, DC-version: | ≤ ± 3 % of the max. scale value |

### Input

| | |
|---|---|
| **Nominal voltage $U_N$:** | AC 24, 42, 110, 127, 230, 240 V |
| **Special voltages** | |
| AA 7616: | AC 12, 400, 415 V |
| EH 7616: | DC 12, 24, 48, 60*, 110*, 230* V<br>*) with external series resistore |
| **Voltage range:** | 0.8 ... 1.1 $U_N$ |
| **Nominal consumption:** | AC 7 VA<br>DC 12 V 5 W<br>DC 24 V 5 W<br>DC 48 V 7 W<br>DC 60 V 10 W<br>DC 110 V 13 W<br>DC 230 V 18 W |
| **Nominal frequency:** | 50 / 60 Hz switchable |
| **Frequency range:** | ± 5 % $f_N$ |
| **Frequency influence:** | reverse proportional |

### Output

| | | |
|---|---|---|
| **Contacts** | | |
| AA 7616.24,<br>EF 7616.24,<br>EH 7616.24: | 1NC contact, delayed<br>1 NC contact, instantaneous<br>1 NO contact, delayed<br>1 NO contact, instantaneous | |
| AA 7616.32,<br>EC 7616.32,<br>EF 7616.32: | 1 changeover contact, delayed<br>1 changeover contact, instantaneous | |
| **Operate time of contacts:** | < 35 ms | |
| **Release time:** | < 60 ms | |
| **Thermal current $I_{th}$:** | 4 A | |
| **Switching capacity** | | |
| to AC 15: | 3 A / AC 230 V | IEC/EN 60 947-5-1 |
| **Electrical life** | | IEC/EN 60 947-5-1 |
| to AC 15 at 3 A, AC 230 V: | 1 x $10^5$ switching cycles | |
| to AC 15 at 1 A, AC 230 V: | 5 x $10^5$ switching cycles | |
| **Permissible switching frequency:** | 3 000 switching cycles / h | |
| **Short circuit strength max. fuse rating:** | 10 A gL | IEC/EN 60 947-5-1 |
| **Mechanical life:** | > 30 x $10^6$ switching cycles or > 15 000 h | |

### General Data

| | | |
|---|---|---|
| **Operating mode:** | Continuous operation | |
| **Temperature range:** | - 20 ... + 55°C | |
| **Clearance and creepage distances** | | |
| rated impulse voltage / pollution degree: | 4 kV / 2 | IEC 60 664-1 |

## Technical Data

| | | |
|---|---|---|
| **EMC** | | |
| Electrostatic discharge: | 8 kV (air) | IEC/EN 61 000-4-2 |
| HF irradiation: | 10 V/m | IEC/EN 61 000-4-3 |
| Fast transients: | 4 kV | IEC/EN 61 000-4-4 |
| Surge voltages between wires for power supply: | 2 kV | IEC/EN 61 000-4-5 |
| between wire and ground: | 4 kV | IEC/EN 61 000-4-5 |
| HF-wire guided: | 10 V | IEC/EN 61 000-4-6 |
| Interference suppression: | Limit value class B | EN 55 011 |
| **Degree of protection** | | IEC/EN 60 529 |
| AA 7616: | Housing: IP 40<br>Terminals: IP 20 | |
| EC, EH 7616: | Hosuing-front: IP 40<br>Housing: IP 30<br>Terminals: IP 10 | |
| EF 7616: | Housing-front: IP 65 | |
| **Housing:** | Thermoplast with V0-behaviour according to UL Subject 94 | |
| **Vibration resistance:** | Amplitude 0.35 mm frequency 10...55Hz, | IEC/EN 60 068-2-6 |
| **Climate resistance:** | 20 / 055 / 04; A/B/C | IEC/EN 60 068-1 |
| **Terminal arrangement:** | DIN 46 199-5 | |
| **Terminal designation:** | EN 50 005 | |
| **Wire connection:** | 2 x 2.5 $mm^2$ solid or<br>2 x 1.5 $mm^2$ stranded wire with sleeve<br>DIN 46 228-1/-2/-3/-4 | |
| **Wire fixing:** | Flat terminals with self-lifting clamping piece | IEC/EN 60 999-1 |
| **Fixing torque:** | 0.8 Nm | |
| **Mounting** | | |
| AA 7616: | DIN rail | IEC/EN 60 715 |
| **Flush mounting** | | |
| EC 7616, EF 7616, EH 7616: | 2 clamps with screws | |
| **Weight:** | | |
| AA 7616: | 320 g | |
| EC 7616: | 320 g | |
| EF 7616: | 400 g | |
| EH 7616: | 450 g | |

## Dimensions

| | |
|---|---|
| **Width x height x depth** | |
| AA 7616: | 45 x 77 x 127 mm |
| EC 7616: | 48 x 72 x 120 mm |
| EF 7616: | 72 x 72 x 128 mm |
| EH 7616: | 96 x 96 x 138 mm |
| **Front panel cut-out** | |
| EC 7616: | 44 x 67 mm |
| EF 7616: | 67 x 67 mm |
| EH 7616: | ø $91^{+1}$ mm |
| **Front surface** | |
| EC 7616: | 48 x 72 mm |
| EF 7616: | 72 x 72 mm |
| EH 7616: | 96 x 96 mm |

## Standard Type

AA 7616.24 AC 230 V 50/60 Hz 0.15 s ... 30 h

| | |
|---|---|
| Article number: | 0000678 |
| • Time range: | 0.15 s ... 30 h |
| • Nominal voltage $U_N$: | AC 230 V |
| • Output: | 1 NC contact, delayed<br>1 NC contact, instantaneous<br>1 NO contact, delayed<br>1 NO contact, instantaneous |
| • Width: | 45 mm |

## Variants

| | |
|---|---|
| AA 7616._ _ /100: | no-voltage safe |
| AA 7616._ _ /102: | switchable from auto-reset to no-voltage safe version |
| AA 7616.24/103: | with switchable no-voltage safe function holding current ≥ 5 mA |
| EC 7616._ _ /100: | no-voltage safe |
| EF 7616._ _ /100: | no-voltage safe |
| EH 7616._ _ /100: | no-voltage safe |

**Ordering example for variants**

AA 7616 .24 /_ _ _ AC 230 V 50 / 60 Hz 60 h

- 60 h — Time range max. value
- 50 / 60 Hz — Nominal frequency
- AC 230 V — Nominal voltage
- /_ _ _ — Variant, if required
- .24 — Contacts
- AA 7616 — Type

## Accessories

**for EC 7616:**

| | |
|---|---|
| ZS 700.06: | Lockable cover<br>Article number: 0004057 |
| ET 7001.407.034: | Plug-in-socket for EC 7616.21<br>Article number: 0004072 |

**for EF 7616:**

| | |
|---|---|
| ZS 700.07: | Lockable cover<br>Article number: 0004058 |
| ET 7616-0-22: | Sealing ring for sealing at the front side<br>Article number: 0045909 |

# MINITIMER
## Timer, On Delayed
## BA 7903

0276770

- According to IEC/EN 61 812-1
- Delay up to 100 s
- Repeat accuracy < ± 3 %
- For AC 24 ... 240 V and DC 24 ... 60 V without series resistor
- 2 changeover contacts
- Width: 45 mm

### Function Diagram

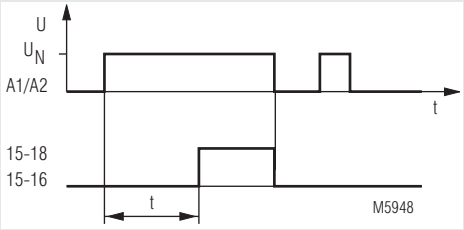


### Approvals and Markings

CE

### Application

Time dependent control

### Circuit Diagram

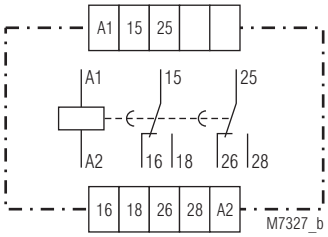


### Connection Terminals

| Terminal designation | Signal description |
|---|---|
| A1, A2 | Voltage supply AC or DC |
| 15, 16, 18; 25, 26, 28 | C/O contacts delayed |

### Technical Data

**Time circuit**

| | | | |
|---|---|---|---|
| **Time ranges:** | 0.05 ... 1 s | 0.5 ... 10 s | 5 ... 100 s |
| **Recovery time** | | | |
| tw 50 / 100: | 300 ms | | |
| **Repeat accuracy:** | ≤ ± 3 % of max. scale value | | |
| **Voltage influence:** | ≤ 3 % | | |
| **Temperature influence:** | ≤ ± 0.3 % / K | | |

**Input**

| | | | |
|---|---|---|---|
| **Nominal voltage $U_N$:** | AC 24, 42, 110, 127, 230, 240 V<br>DC 24, 48, 60 V | | |
| **Voltage range:** | 0.8 ... 1.1 $U_N$ | | |
| **Nominal consumption:** | AC 230 V<br>10 VA | AC 24 V<br>1 VA | DC 24 V<br>1 W |
| **Nominal frequency:** | 50 / 60 Hz | | |
| **Frequency range:** | ± 5 % $f_N$ | | |

**Output**

| | | |
|---|---|---|
| **Contacts** | | |
| BA 7903.81: | 1 changeover contact, delayed | |
| BA 7903.82: | 2 changeover contacts, delayed | |
| **Contact material** | | |
| BA 7903.81: | $AgSnO_2$ 0,2µ, gold plated | |
| BA 7903.82: | AgNi 0,2µ, gold plated | |
| **Measured nominal voltage:** | AC 250 V | |
| **Release time:** | 10 ms | |
| **Thermal current $I_{th}$:** | 5 A | |
| **Switching capacity** | | |
| to AC 15 | | |
| BA 7903.81: | | |
| NO contact: | 10 A / AC 230 V | IEC/EN 60 947-5-1 |
| NC contact: | 5 A / AC 230 V | IEC/EN 60 947-5-1 |
| BA 7903.82: | | |
| NO contact: | 3 A / AC 230 V | IEC/EN 60 947-5-1 |
| NC contact: | 1 A / AC 230 V | IEC/EN 60 947-5-1 |

## Technical Data

| | | |
|---|---|---|
| **Electrical life** | | |
| to AC 15 at 3 A, AC 230 V | | |
| BA 7903.81: | 2.5 x $10^5$ switch. cycl. | IEC/EN 60 947-5-1 |
| BA 7903.82: | 0.5 x $10^5$ switch. cycl. | IEC/EN 60 947-5-1 |
| **Permissible switching frequency:** | 6000 switching cycles / h | |
| **Short circuit strength max. fuse rating** | | |
| BA 7903.81: | 10 A gL | IEC/EN 60 947-5-1 |
| BA 7903.82: | 6 A gL | IEC/EN 60 947-5-1 |
| **Mechanical life:** | 50 x $10^6$ switching cycles | |

## General Data

| | | |
|---|---|---|
| **Operating mode:** | Continuous operation | |
| **Temperature range** | | |
| Operation: | -10 ... + 50 °C | |
| Storage: | -10 ... + 50 °C | |
| **Altitude:** | < 2.000 m | |
| **Clearance and creepage distances** | | |
| rated impulse voltage / pollution degree: | 4 kV / 3 (basis insulation) | IEC 60 664-1 |
| Overvoltage category: | III | |
| Insulation test voltage, type test: | 2.5 kV; 1 min | |
| **EMC** | | |
| Electrostatic discharge: | 8 kV (air) | IEC/EN 61 000-4-2 |
| HF irradiation: | 10 V/m | IEC/EN 61 000-4-3 |
| Fast transients: | 2 kV | IEC/EN 61 000-4-4 |
| Surge voltages between | | |
| wires for power supply: | 1 kV | IEC/EN 61 000-4-5 |
| between wire and ground: | 2 kV | IEC/EN 61 000-4-5 |
| Interference suppression: | Limit value class B | EN 55 011 |
| **Degree of protection:** | | |
| Housing: | IP 40 | IEC/EN 60 529 |
| Terminals: | IP 20 | IEC/EN 60 529 |
| **Housing:** | Thermoplast with V0 behaviour according to UL subject 94 | |
| **Vibration resistance:** | Amplitude 0.35 mm frequency 10 ... 55 Hz, | IEC/EN 60 068-2-6 |
| **Climate resistance:** | 10 / 050 / 04 | IEC/EN 60 068-1 |
| **Terminal arrangement:** | DIN 46 199-5 | |
| **Terminal designation:** | EN 50 005 | |
| **Wire connection:** | 2 x 2,5 $mm^2$ solid or 2 x 1,5 $mm^2$ stranded wire with sleeve DIN 46 228-1/-2/-3/-4 | |
| **Wire fixing:** | Flat terminals with self-lifting clamping piece | IEC/EN 60 999-1 |
| **Fixing torque:** | 0.8 Nm | |
| **Mounting:** | DIN rail | IEC/EN 60 715 |
| **Weight:** | 170 g | |

## Dimensions

**Width x heigth x depth**: 45 x 74 x 133 mm

## Standard Type

BA 7903.81 AC 230 V 50 / 60 Hz 0.5 ... 10 s

| | |
|---|---|
| Article number: | 0044217 |
| • Output: | 1 changeover contact delayed |
| • Nominal voltage $U_N$: | AC 230 V |
| • Time range: | 0.5 ... 10 s |
| • Width: | 45 mm |

## Ordering Example

BA 7903 .81 DC 24 V 100 s

- 100 s — Time range end value
- DC 24 V — Nominal voltage
- .81 — Contacts
- BA 7903 — Type

# MINITIMER
## Timer, On Delayed
## BA 7905

### Your Advantages
- Safe connection of machine parts during start up
- High repeat accuracy
- Wide setting rangeh
- Easy setting

### Features
- According to IEC/EN 61 812-1
- Delay up to 300 s
- Repeat accuracy < ± 1 %
- Voltage up to DC 220 V without series resistor
- With remote potentiometer connection
- with LED indication for operation and contact position
- 1 or 2 changeover contacts
- Width 45 mm

### Product Description

The timer BA 7905 can be used to switch devices and controls with an adjustable on delay. With these timer the start behaviour of machine parts e. g. the starting of motors can be influenced. With a potentiometer the time delay can be adjusted simply over a large setting range.

### Approvals and Markings

CE

### Function Diagram

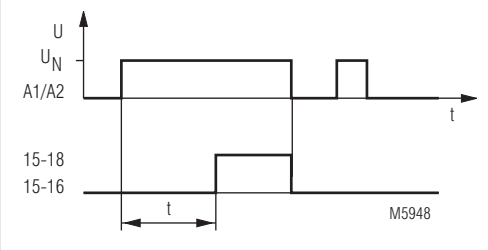


### Application

Time dependent control

### Indication

| | |
|---|---|
| upper LED: | on when operating voltage applied |
| lower LED: | on when output relay activated |

### Circuit Diagrams

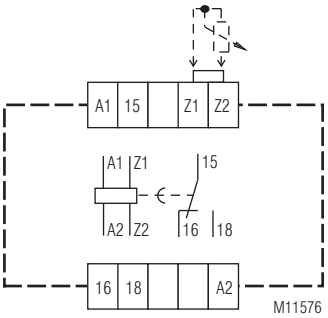


BA 7905.81

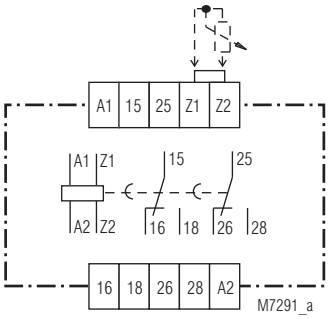


BA 7905.82

### Connection Terminals

| Terminal designation | Signal description |
|---|---|
| A1(+), A2(-) | Voltage supply AC/DC |
| Z1, Z2 | External potentiometers |
| 15, 16, 18 | C/O contacts (output relays) |
| 25, 26, 28 | C/O contacts (2nd output relays) |

## Technical Data

**Time circuit**

| | | |
|---|---|---|
| **Time ranges:** | 0.05 ... 1 s | 1.5 ... 30 s |
| | 0.15 ... 3 s | 5 ... 100 s |
| | 0.5 ... 10 s | 15 ... 300 s |
| **Setting:** | Stepless, setting on absolute scale. Connection possibility for external variable resistor on terminal Z1-Z2 (5-6). Variable resistor in the device to be set to the minimum value and bridge Z1-Z2 (5-6) is to be removed. | |
| **Recovery time** | | |
| tw 50 / 100: | 100/50 ms | |
| **Repeat accuracy:** | ≤ ± 1 % of max. scale value | |
| **Voltage influence:** | 0.5 % | |
| **Temperature influence:** | 0.2 % / K | |

**Input**

| | | |
|---|---|---|
| **Nominal voltage $U_N$:** | AC 24, 42, 110 ... 127, 230, 240 V | |
| | DC 24, 42, 60, 110 ... 127, 220 V | |
| **Voltage range:** | 0.8 ... 1.1 $U_N$ | |
| **Nominal consumption:** | AC 24 230 V | |
| | 1.9 18 VA | |
| | DC 24 220 V | |
| | 0.8 2.6 W | |
| **Nominal frequency:** | 50 / 60 Hz | |
| **Frequency range:** | ± 5 % $f_N$ | |

**Output**

| | | |
|---|---|---|
| **Contacts** | | |
| BA 7905.81: | 1 changeover contact, delayed | |
| BA 7905.82: | 2 changeover contacts, delayed | |
| **Contact material:** | AgNi | |
| **Measured nominal voltage:** | AC 250 V | |
| **Release time:** | 10 ms | |
| **Thermal current $I_{th}$:** | 5 A | |
| **Switching capacity** | | |
| to AC 15: | 3 A / AC 230 V | IEC/EN 60 947-5-1 |
| to DC 14: | 2 A / DC 24 V | IEC/EN 60 947-5-1 |
| **Electrical life** | | IEC/EN 60 947-5-1 |
| to AC 15 at 3 A, AC 230 V | | |
| BA 7905.81: | 2.5 x $10^5$ switching cycles | |
| BA 7905.82: | 0.5 x $10^5$ switching cycles | |
| **Permissible switching frequency:** | 6000 switching cycles / h | |
| **Short circuit strength max. fuse rating:** | 4 A gL | IEC/EN 60 947-5-1 |
| **Mechanical life:** | 50 x $10^6$ switching cycles | |

**General Data**

| | | |
|---|---|---|
| **Operating mode:** | Continuous operation | |
| **Temperature range:** | | |
| Operation: | - 20 ... + 60 °C | |
| Storage: | - 20 ... + 60 °C | |
| **Altitude:** | < 2,000 m | |
| **Clearance and creepage distances** | | |
| rated impulse voltage / pollution degree | | |
| in- / output: | 4 kV / 2 | IEC 60 664-1 |
| **EMC** | | |
| Electrostatic discharge: | 8 kV (air) | IEC/EN 61 000-4-2 |
| HF irradiation: | | |
| 80 MHz ... 1 GHz: | 12 V / m | IEC/EN 61 000-4-3 |
| 1 GHz ... 2.7 GHz: | 10 V / m | IEC/EN 61 000-4-3 |
| Fast transients: | 2 kV | IEC/EN 61 000-4-4 |
| Surge voltages between | | |
| wires for power supply: | 1 kV | IEC/EN 61 000-4-5 |
| between wire and ground: | 2 kV | IEC/EN 61 000-4-5 |
| HF-wire guided: | 10 V | IEC/EN 61 000-4-6 |
| Interference suppression: | Limit value class B | EN 55 011 |
| **Degree of protection** | | |
| Housing: | IP 40 | IEC/EN 60 529 |
| Terminals: | IP 20 | IEC/EN 60 529 |

## Technical Data

| | | |
|---|---|---|
| **Housing:** | Thermoplast with V0 behaviour according to UL subject 94 | |
| **Vibration resistance:** | Amplitude 0.35 mm frequency 10...55Hz | IEC/EN 60 068-2-6 |
| **Climate resistance:** | 20 / 050 / 04 | IEC/EN 60 068-1 |
| **Terminal designation:** | EN 50 005 | |
| **Wire connection:** | 2 x 2.5 $mm^2$ solid or 2 x 1.5 $mm^2$ stranded wire with sleeve DIN 46 228-1/-2/-3/-4 | |
| **Wire fixing:** | Flat terminals with self-lifting clamping piece | IEC/EN 60 999-1 |
| **Fixing torque:** | 0.8 Nm | |
| **Mounting:** | DIN rail | IEC/EN 60 715 |
| **Weight:** | 170 g | |

**Dimensions**

**Width x height x depth**: 45 x 74 x 133 mm

## Standard Type

BA 7905.81 AC 230 V 50/60 Hz 0.5 ... 10 s

| | |
|---|---|
| Article number: | 0021737 |
| • Output: | 1 changeover contact, delayed |
| • Nominal voltage $U_N$: | AC 230 V |
| • Time range: | 0.5 ... 10 s |
| • Width: | 45 mm |

## Varianten

BA 7905.82/200 with guided contacts

**Ordering example for variants**

BA 7905 .81 /_ _ AC 230 V 50 / 60 Hz 300 s

- 300 s — Time range max. value
- 50 / 60 Hz — Nominal frequency
- AC 230 V — Nominal voltage
- /_ _ — Variant, if required
- .81 — Contacts
- BA 7905 — Type

## Accessories

AD 3: External variable resistor
Article number:: 0028962

| | |
|---|---|
| 0.05 ... 1 s | 1 MΩ |
| 0.15 ... 3 s | 2.2 MΩ |
| 0,5 ... 10 s | 10 MΩ |
| 1.5 ... 30 s | 10 MΩ |
| 5 ... 100 s | 10 MΩ |
| 15 ... 300 s | 20 MΩ |

Degree of protection front side: IP60

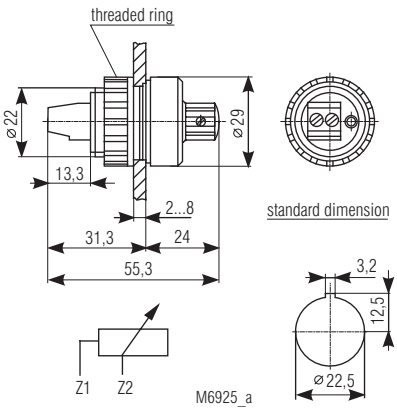


K 70-34: Transparent cover for AI 905
Article number: 0011790

# MINITIMER
## Digital Time Relay, on delayed
## EC 7801

- According to IEC/EN 61 812-1
- For delay up to 9999 min.
- Repeat accuracy < ± 1 %
- LED indicators for power supply and state of contact
- 1 changeover contact
- As option with second C/O as instantaneous contact
- As option 2, 3 or 4 decades
- 48 x 72 mm front surface

### Function Diagram

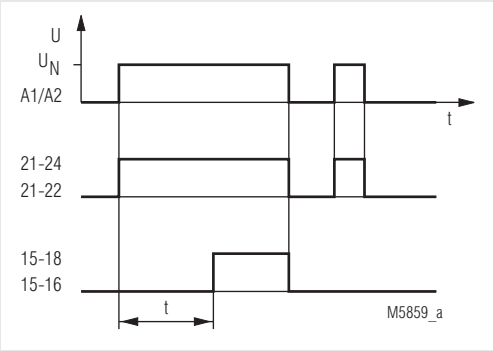


### Approvals and Markings

CE

### Application

Time dependent controls

### Indicators

| | |
|---|---|
| LED left: | on when supply connected |
| LED right: | on, when corresponding output relay is active |

### Circuit Diagrams

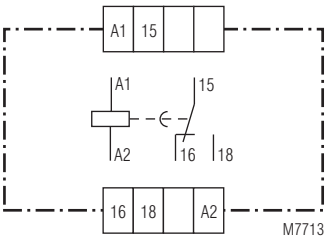


EC 7801.81

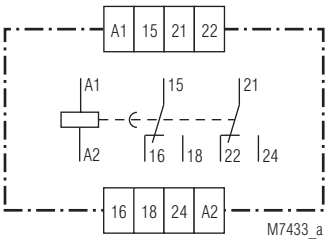


EC 7801.32

### Technical Data

**Time circuit**

| | |
|---|---|
| **Time range**: | 2 decades |
| | 0.01 ... 0.99 s |
| | 0.1 ... 9.9 s |
| | 1 ... 99 s |
| | 0.01 ... 0.99 min |
| | 0.1 ... 9.9 min |
| | 1 ... 99 min |
| | 3 decades |
| | 0.01 ... 9.99 s |
| | 0.1 ... 99.9 s |
| | 1 ... 999 s |
| | 0.01 ... 9.99 min |
| | 0.1 ... 99.9 min |
| | 1 ... 999 min |
| | 4 decades |
| | 0.01 ... 99.99 s |
| | 0.1 ... 999.9 s |
| | 1 ... 9999 s |
| | 0.01 ... 99.99 min |
| | 0.1 ... 999.9 min |
| | 1 ... 9999 min |
| **Time setting:** | digital on decaded pre-selection switch |
| **Recovery time:** | 20 ms |
| **Repeat accuracy:** | ± 1 % + 10 ms |
| **Voltage influence:** | ≤ 0.5 % at 0.8 ... 1.1 $U_N$ |
| **Temperature influence:** | ≤ 0.1 % / K |

## Technical Data

### Input

| | |
|---|---|
| **Nominal voltage $U_N$:** | AC 24, 42, 110, 127, 230, 240 V<br>DC 24 V with polarity protection |
| **Voltage range:** | 0.8 ... 1.1 $U_N$ |
| **Nominal consumption:** | AC 3.5 VA<br>DC 2.5 W |
| **Nominal frequency:** | 50 / 60 Hz |
| **Frequency range:** | ± 5 % |

### Output

| | | |
|---|---|---|
| **Contacts** | | |
| EC 7801.81: | 1 changeover contact, delayed | |
| EC 7801.32: | 1 changeover contacts instantaneous<br>1 changeover contact, delayed | |
| **Thermal current $I_{th}$:** | 5 A | |
| **Switching capacity** | | |
| according to AC 15 | | |
| NO contact: | 3 A / AC 230 V | IEC/EN 60 947-5-1 |
| NC contact: | 1 A / AC 230 V | IEC/EN 60 947-5-1 |
| **Electrical life** | | |
| acc. to AC 15 at 3 A, AC 230 V: | 2.5 x $10^5$ switching cycles | IEC/EN 60 947-5-1 |
| **Permissible switching frequency:** | 6 000 switching cycles / h | |
| **Short circuit strength** | | |
| max. fuse rating: | 4 A gL | IEC/EN 60 947-5-1 |
| **Mechanical life:** | 30 x $10^6$ switching cycles | |

### General Data

| | | |
|---|---|---|
| **Nominal operating mode:** | continuous operation | |
| **Temperaturr range:** | - 20 ... + 60°C | |
| **Clearance and creepage distance** | | |
| rated impulse voltage / pollution degree: | 4 kV / 2 | IEC 60 664-1 |
| **EMC** | | |
| Electrostatic discharge (ESD): | 8 kV (air) | IEC/EN 61 000-4-2 |
| HF irradiation: | 10 V/m | IEC/EN 61 000-4-3 |
| Fast transients: | 4 kV | IEC/EN 61 000-4-4 |
| Interference suppression: | Limit value class A | EN 55 011 |
| **Degree of protection** | | |
| Housing: | IP 40 | IEC/EN 60 529 |
| Terminals: | IP 20 | IEC/EN 60 529 |
| **Housing:** | Thermoplastic with VO behaviour according to UL subject 94 | |
| **Vibration resistance:** | Amplitude 0.35 mm<br>frequency 10 ... 55 Hz | IEC/EN 60 068-2-6 |
| **Climate resistance:** | 20 / 060 / 04 | IEC/EN 60 068-1 |
| **Terminal designation:** | EN 50 005 | |
| **Wire connection:** | 2 x 2.5 $mm^2$ solid or<br>2 x 1.5 $mm^2$ stranded wire with sleeve<br>DIN 46 228-1/-2/-3/-4 | |
| **Wire fixing:** | Flat terminals with self-lifting clamping piece | IEC/EN 60 999-1 |
| **Flush mounting:** | 2 clamps with screws | |
| **Weight:** | 340 g | |

### Dimensions

| | |
|---|---|
| **Width x height x depth:** | 48 x 72 x 120 mm |
| **Front panel cut-out:** | 44 x 67 mm |

## Standard Type

EC 7801.81 AC 230 V 50/60 Hz 1 ... 999 s

| | |
|---|---|
| Article number: | 0034652 |
| • Output: | 1 changeover contact |
| • Nominal voltage $U_N$: | AC 230 V |
| • Time range: | 1 ... 999 s |
| • Width: | 48 x 72 mm front surface |

## Ordering Example

EC 7801 .81 AC 240 V 50 / 60 Hz 999 h

- 999 h — Time range
- 50 / 60 Hz — Nominal frequency
- AC 240 V — Nominal voltage
- .81 — Contacts
- EC 7801 — Type

## Accessories

| | |
|---|---|
| ZS 700.06: | Cover<br>Article number: 000405 |

# MINITIMER
## Digital Time Relay, on delayed
## EC 9621

- According to IEC/EN 61 812-1
- For delay up to 99.99 h
- Repeat accuracy < ± 0.5 %
- LED indicators for power supply and state of contact
- As option with time progression indication
- As option 1 or 2 changeover contacts or semiconductor outputs
- 48 x 72 mm front surface

### Function Diagram

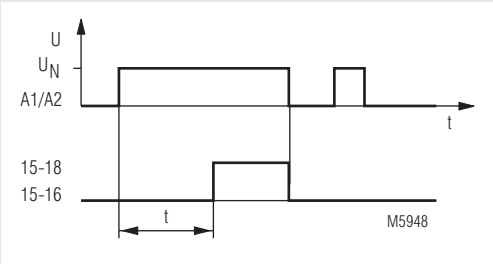


### Circuit Diagrams

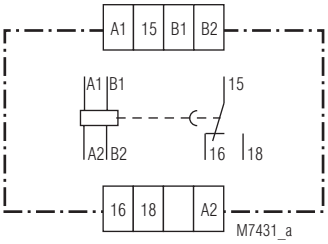


EC 9621.81/05

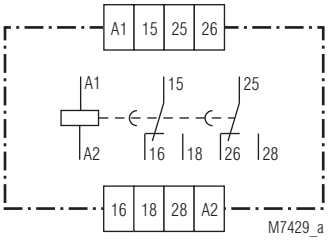


EC 9621.82

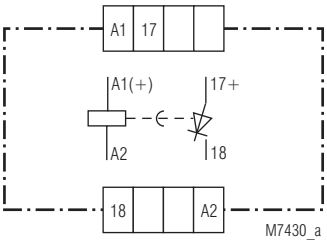


EC 9621.95

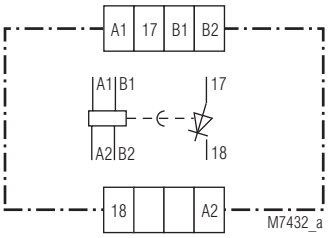


EC 9621.95/05

### Approvals and Markings

CE

### Application

Time dependent controls

### Indicators

| | |
|---|---|
| LED left: | on when supply connected |
| LED right: | on, when corresponding output relay is active |

### Technical Data

**Time circuit**

| | |
|---|---|
| **Time range**: | 2 decades<br>0.01 ... 0.99 s<br>0.1 ... 9.9 s<br>1 ... 99 s<br>0.1 ... 9.9 min<br>1 ... 99 min<br>0.1 ... 9.9 h<br>1 ... 99 h<br>4 decades<br>0.001 ... 9.999 s<br>0.01 ... 99.99 s<br>0.1 ... 999.9 s<br>0.01 ... 99.99 min<br>0.1 ... 999.9 min<br>0.01 ... 99.99 h |
| **Time setting:** | digital on decaded pre-selection switch |
| **Recovery time:** | 20 ms |
| **Repeat accuracy:** | ≤ ± 0.5 % of full scale value |
| **Temperature and voltage influence:** | max. ± 0.025 % of the pre-selected time over the complete temperature and voltage range |

**Input**

| | |
|---|---|
| **Nominal voltage $U_N$:** | AC 24, 42, 110, 127, 230, 240 V<br>DC 24 V |
| **Voltage range:** | 0.8 ... 1.1 $U_N$ |
| **Nominal consumption:** | AC 3 VA<br>DC 1.5 W |
| **Nominal frequency:** | 50 / 60 Hz |
| **Frequency range:** | ± 5 % |

## Technical Data

**Output**

**Contacts**

| | | |
|---|---|---|
| EC 9621.81: | 1 changeover contact | |
| EC 9621.82: | 2 changeover contacts | |
| EC 9621.95: | 1 transistor output | |
| **Release time of the contacts:** | 10 ms | |
| **Thermal current $I_{th}$:** | 10 A | |
| **Switching capacity** according to AC 15 | | |
| NO contact: | 10 A / AC 230 V | IEC/EN 60 947-5-1 |
| NC contact: | 5 A / AC 230 V | IEC/EN 60 947-5-1 |
| **Electrical life** | | IEC/EN 60 947-5-1 |
| acc. to AC 15 bei 3 A, AC 230 V: | 1 C/O contact: 2.5 x $10^5$ switching cycles<br>2 C/O contact: 0.5 x $10^5$ switching cycles | |
| **Switching capacity of semiconductor outputs:** | switching voltage: 14 ... 31.2 V<br>switching current: max. 130 mA<br>voltage drop: 1.5 V<br>max. residual current: 0.1 mA | |
| **Permissible switching frequency:** | 6 000 switching cycles / h | |
| **Short circuit strength** | | |
| max. fuse rating: | 4 A gL | IEC/EN 60 947-5-1 |
| **Mechanical life:** | > 30 x $10^6$ switching cycles | |

**General Data**

| | | |
|---|---|---|
| **Nominal operating mode:** | continuous operation | |
| **Temperaturr range:** | - 20 ... + 60°C | |
| **Clearance and creepage distance** | | |
| rated impulse voltage / pollution degree: | 4 kV / 2 | IEC 60 664-1 |
| **EMC** | | |
| Electrostatic discharge (ESD): | 6 kV (air) | IEC/EN 61 000-4-2 |
| HF irradiation: | 10 V/m | IEC/EN 61 000-4-3 |
| Fast transients: | 4 kV | IEC/EN 61 000-4-4 |
| Surge voltage between | | |
| wires for power supply: | 2 kV | IEC/EN 61 000-4-5 |
| between wire and ground: | 4 kV | IEC/EN 61 000-4-5 |
| Interference suppression: | Limit value class A | EN 55 011 |
| **Degree of protection:** | | |
| Housing: | IP 40 | IEC/EN 60 529 |
| Terminals: | IP 20 | IEC/EN 60 529 |
| **Enclosure:** | Thermoplastic with VO behaviour according to UL Subject 94 | |
| **Vibration resistance:** | Amplitude 0.35 mm<br>Frequency: 10 ... 55 Hz | IEC/EN 60 068-2-6 |
| **Climate resistance:** | 20 / 060 / 04 | IEC/EN 60 068-1 |
| **Terminal designation:** | EN 50 005 | |
| **Wire connection:** | 2 x 2.5 mm² solid or<br>2 x 1.5 mm² stranded wire with sleeve<br>DIN 46 288-1/-2/-3/-4 | |
| **Wire fixing:** | Flat terminals with self-lifting clamping piece | IEC/EN 60 999-1 |
| **Weight:** | 260 g | |

**Dimensions**

| | |
|---|---|
| **Width x height x depth:** | 48 x 72 x 120 mm |
| **Front panel cut-out:** | 44 x 67 mm |

## Standard Type

EC 9621.81/03 AC 230 V 50 / 60 Hz 99 h

| | |
|---|---|
| Article number: | 0006477 |
| • Output: | 1 changeover contact |
| • Nominal voltage $U_N$: | AC 230 V |
| • Set time delay: | 99 h |
| • Front surface: | 48 x 72 mm |

## Variants

| | |
|---|---|
| EC 9621. _ _ /03: | time progression indication with 10-level LED chain |
| EC 9621. _ _ /05: | An additional control possibility contains' by a logic voltage.<br>By the galvanic separation of logic input a direct control over gates are possible . The input can be controlled with DC-voltage by DC 10 V to 32 V.<br>Signal voltages under DC 7 V are detected as „L-Signal“ and voltages over DC 10 V are detected as „H-Signal“.<br>Time delay can be started or deleted by the control voltage or by the auxiliary voltage.<br>This version can be supplied only with a contact or a semiconductor output |

**Ordering example for variants**

EC 9621 .81 /_ _ AC 230 V 50 / 60 Hz 99 h

- 99 h — Set time delay
- 50 / 60 Hz — Nominal frequency
- AC 230 V — Nominal voltage
- /_ _ — Variant, if required
- .81 — Contacts
- EC 9621 — Type

## Accessories

| | |
|---|---|
| ET 7001.404.034: | Plug-in-socket for digital-time-relays EC 9621.81, EC 9621.82<br>Article number: 007000 |
| ET 9620-11: | Plug-in-socket for digital-time-relays EC 9621.95<br>Article number: 0020444 |
| ZS 700.06: | Cover<br>Article number: 0004057 |

# MINITIMER
## Timer, Release Delay
## IK 7819, SK 7819, BC 7938N

0221565

IK 7819 SK 7819 BC 7938N

- According to IEC/EN 61 812-1
- Release delay, with control signal
- No-voltage safe
- 1 changeover contact
- Delay of 0.05 ... 300 s
- Wide voltage range
- Repeat accuracy ≤ 1 %
- LED indicator for operation
- Devices available in 3 enclosure versions:
  IK 7819: depth 58 mm, with terminals at the bottom for installation systems and industrial distribution systems according to DIN 43 880
  SK 7819, BC 7938N: depth 98 mm, with terminals at the top for cabinets with mouning plate and cable duct
- IK/SK 7819: width 17.5 mm
  BC 7938N: width 22.5 mm

### Function Diagram

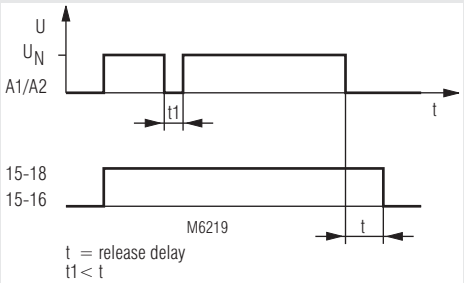


### Approvals and Markings

CE

### Application

Time-dependent controllers

### Notes

A change of the settings for time range will be valid immediately.
Please note, that a change of time range or time setting during elapse of time can lead to unintended switching of the output contacts.

### Circuit Diagrams

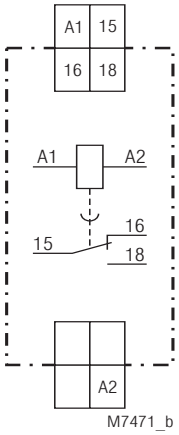


IK/SK 7819.81

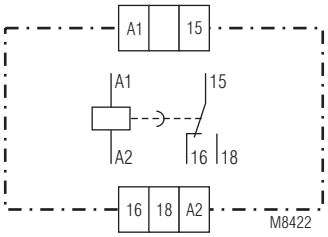


BC 7938N.81

### Connection Terminals

| Terminal designation | Signal description |
|---|---|
| A1 | L / + |
| A2 | N / - |
| 15, 16, 18 | Changeover contact |

## Technical Data

| | |
|---|---|
| **Time ranges:** | 0.05 ... 1 s |
| | 0.15 ... 3 s |
| | 0.5 ... 10 s |
| | 1.5 ... 30 s |
| | 5 ... 100 s |
| | 15 ... 300 s |
| **Time setting:** | infinite on relative scale |
| **Recovery time:** | 100 ms |
| **Repeat accuracy:** | ≤ 1 % of end of scale value |
| **Min. on-time at time range 15 ... 300 s:** | AC/DC 24 V - 300 ms |
| | AC/DC 42 V - 250 ms |
| | AC/DC 80 V - 200 ms |
| **Temperature influence:** | < 0.1 % / K |

### Input

| | | |
|---|---|---|
| **Nominal voltage $U_N$:** | AC/DC 24 V | |
| | AC/DC 42 ... 60 V | |
| | AC/DC 110 ... 240 V | |
| **Voltage range:** | | |
| for AC/DC 24 V: | | |
| with 48 % residual ripple | AC / DC | 20.5 ... 27 V |
| with ≤ 10 % residual ripple | DC | 20.5 ... 30 V |
| for AC/DC 42 ... 60 V: | | |
| with 48 % residual ripple | AC / DC | 30 ... 66 V |
| with ≤ 10 % residual ripple | DC | 30 ... 80 V |
| with AC/DC 110 ... 240 V: | | |
| with 48 % residual ripple | AC / DC | 60 ... 264 V |
| with ≤ 10 % residual ripple | DC | 60 ... 300 V |
| **Release voltage:** | > 10 % $U_N$ | |
| **Nominal consumption** | | |
| for AC/DC 24 V: | 0.05 VA / W | |
| for AC/DC 60 V: | 0.12 VA / W | |
| for AC/DC 240 V: | 0.4 VA / W | |
| **Nominal frequency:** | 50/60 Hz | |
| **Frequency range:** | ± 5 % | |
| **Switch-on current** | | |
| for AC/DC 24 V: | 0.6 A | |
| for AC/DC 60 V: | 0.7 A | |
| for AC/DC 240 V: | 1.1 A | |

### Output

| | | |
|---|---|---|
| **Contacts:** | 1 changeover contact | |
| **Contact material:** | AgNi | |
| **Measured nominal voltage:** | AC 250 V | |
| | DC see limit curve for arc-free operation | |
| **Thermal current $I_{th}$:** | 5 A | |
| **Switching capacity** | | |
| to AC 15 | | |
| NO contact: | 3 A / AC 230 V | IEC/EN 60 947-5-1 |
| NC contact: | 1 A / AC 230 V | IEC/EN 60 947-5-1 |
| **Electrical life** | | IEC/EN 60 947-5-1 |
| to AC 15 at 1 A, AC 230 V: | ≥ 1.5 x $10^5$ switching cycles | |
| **Permissible switching frequency** | 72 000 switching cycles / h | |
| **Short circuit strength max. fuse rating:** | 4 A gG / gL | IEC/EN 60 947-5-1 |
| **Mechanical life:** | > $10^8$ switching cycles | |

## Technical Data

### General Data

| | | |
|---|---|---|
| **Operating mode:** | Continuous operation | |
| **Temperature range:** | | |
| Operation: | - 20 ... + 60 °C | |
| Storage: | - 25 ... + 65 °C | |
| **Relative air humidity:** | 95 % at 40 °C | |
| **Altitude:** | < 2.000 m | |
| **Clearance and creepage distances** | | |
| rated impulse voltage / pollution degree: | 4 kV / 2 (basis insulation) | IEC 60 664-1 |
| Overvoltage category: | III | |
| Insulation test voltage, type test: | 2.5 kV; 1 min | |
| **EMC** | | |
| Electrostatic discharge: | 6 kV (contact) | IEC/EN 61 000-4-2 |
| | 8 kV (air) | IEC/EN 61 000-4-2 |
| HF-irradiation | | |
| 80 MHz ... 1 GHz: | 12 V / m | IEC/EN 61 000-4-3 |
| 1 GHz ... 2.7 GHz: | 10 V / m | IEC/EN 61 000-4-3 |
| Fast transients | | |
| IK / SK 7819: | 4 kV | IEC/EN 61 000-4-4 |
| BC 7938N: | 2 kV | IEC/EN 61 000-4-4 |
| Surge voltages between wires for power supply | | |
| IK/SK 7819: | 2 kV | IEC/EN 61 000-4-5 |
| BC7938N: | 1 kV | IEC/EN 61 000-4-5 |
| between wire and ground | | |
| IK/SK 7819: | 4 kV | IEC/EN 61 000-4-5 |
| BC7938N: | 2 kV | IEC/EN 61 000-4-5 |
| HF-wire guided: | 10 V | IEC/EN 61 000-4-6 |
| Interference suppression: | Limit value class B | EN 55 011 |
| **Degree of protection** | | |
| Housing: | IP 40 | IEC/EN 60 529 |
| Terminals: | IP 20 | IEC/EN 60 529 |
| **Housing:** | Thermoplastic with V0 behaviour according to UL subject 94 | |
| **Vibration resistance:** | Amplitude 0.35 mm frequency 10 ... 55 Hz | IEC/EN 60 068-2-6 |
| **Climate resistance:** | 20 / 060 / 04 | IEC/EN 60 068-1 |
| **Terminal designation:** | EN 50 005 | |
| **Wire connection:** | DIN 46 228-1/-2/-3/-4 | |
| Cross section | | |
| IK/SK 7819: | 2 x 2.5 $mm^2$ solid or<br>2 x 1.5 $mm^2$ stranded ferruled | |
| BC 7938N: | 1 x 4 $mm^2$ solid or<br>2 x 1.5 $mm^2$ stranded ferruled<br>1 x 2.5 $mm^2$ stranded ferruled (isolated) | |
| Stripping length: | 10 mm | |
| **Wire fixing:** | | |
| IK/SK 7819: | Flat terminals with self-lifting clamping piece | IEC/EN 60 999-1 |
| BC 7938N: | Plus-minus terminal screws M3.5<br>Box terminal with wire protection | |
| **Fixing torque:** | 0.8 Nm | |
| **Mounting:** | DIN rail | IEC/EN 60 715 |
| **Weight** | | |
| IK 7819: | 70 g | |
| SK 7819: | 89 g | |
| BC 7938N: | 105 g | |

### Dimensions

| | |
|---|---|
| **Width x height x depth** | |
| IK 7819: | 17.5 x 90 x 58 mm |
| SK 7819: | 17.5 x 90 x 98 mm |
| BC 7938N: | 22.5 x 84 x 98 mm |

## Standard Type

IK 7819.81 AC/DC 110 ... 240 V 0.15 ... 3 s
Article number: 0044645
- Output: 1 changeover contact
- Nominal voltage $U_N$: AC/DC 110 ... 240 V
- Time range: 0.15 ... 3 s
- Width: 17.5 mm

SK 7819.81 AC/DC 110 ... 240 V 0.15 ... 3 s
Article number: 0054741
- Output: 1 changeover contact
- Nominal voltage $U_N$: AC/DC 110 ... 240 V
- Time range: 0.15 ... 3 s
- Width: 17.5 mm

BC 7938N.81 AC/DC 110 ... 240 V 0.5 ... 10 s
Article number: 0055774
- Front color grey, with box terminals
- Output: 1 changeover contact
- Nominal voltage $U_N$: AC/DC 110 ... 240 V
- Time range: 0.5 ... 10 s
- Width: 22.5 mm

## Ordering Example

IK 7819 .81 AC/DC 24 V 0.5 ... 10 s

- 0.5 ... 10 s — Time range
- AC/DC 24 V — Nominal voltage
- .81 — Contact
- IK 7819 — Type

## Characteristic

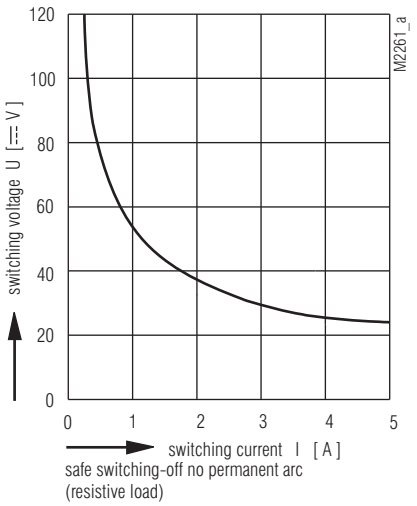


Limit curve for arc-free operation

## Connection Example

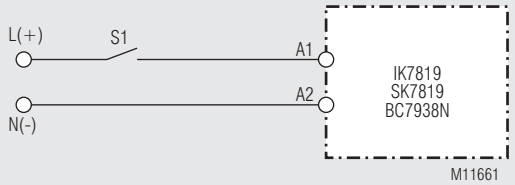

# MINITIMER
## Time Delay Relay, Release Delay Type
## IK 7823, SK 7823

0232813

IK 7823

SK 7823

- According to IEC/EN 61 812-1
- With 4 time ranges of 0.25 ... 640 s or 0.25 ... 640 min
- Adjustable
- With auxiliary voltage
- For wide voltage range AC 50/60 Hz 110 ... 240 V
- Control input operated with nominal voltage; no voltage free contact necessary
- LED indicator for status of contact
- 1 changeover contact
- **Devices available in 2 enclosure versions:**
  **IK 7823: depth 59 mm, with terminals at the bottom for installation systems and industrial distribution systems according to DIN 43 880**
  **SK 7823: depth 98 mm, with terminals at the top for cabinets with mounting plate and cable duct**
- Width 17.5 mm

### Function Diagram

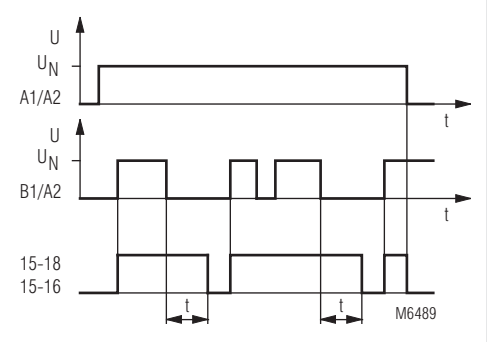


### Circuit Diagram

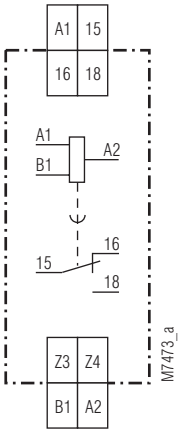


IK 7823.81, SK 7823.81

### Approvals and Markings

CE

### Applications

Time-dependent controllers

### Indicators

| | |
|---|---|
| LED: | on, when output relay activated (contact 15 - 18 closed) |

### Notes

The control input B1 relative to A2 has the same voltage range as A1-A2. In a 3-phase system B1 can also be connected to a different phase then A1 if the neutral is connected to A2. As the control input is operated with voltage, the control contact can also switch additional loads, e.g. contactors with the same A2 reference. This allows to use less contacts (see connection Diagram).

### Technical Data

**Time circuit**

**Time ranges:** 4 different time ranges programmable via terminals:

| s - time range | min - time range | bridge |
|---|---|---|
| 0.25 ... 2.5 s | 0.25 ... 2.5 min | Z4-----A2 |
| 1 ... 10 s | 1 ... 10 min | Z3---------- A2 |
| 8 ... 80 s | 8 ... 80 min | Z3-----Z4-----A2 |
| 64 ... 640 s | 64 ... 640 min | (without) |

| | |
|---|---|
| **Tolerance of the max. scale value:** | - 5 ... + 25 % |
| **Time setting:** | infinitely variable 1:10 on relative scale |
| **Min. closing time** (Control input B1): | ≥ 20 ms |
| **Repeat accuracy:** | ≤ 0.5 % + 20 ms |
| **Voltage influence:** | ≤ 1 % |
| **Temperature influence:** | ≤ 0.25 % / K |

**Input**

| | | |
|---|---|---|
| **Nominal voltage $U_N$:** | AC 110 ... 240 V, AC/DC 24 V | |
| **Voltage range:** | 0.8 ... 1.1 $U_N$ | |
| **Nominal consumption** (A1-A2)**:** | AC 230 V: | approx. 8 VA |
| | AC 24 V: | approx. 1.5 VA |
| | DC 24 V: | approx. 0.7 W |
| **Nominal frequency:** | 50 / 60 Hz | |
| **Reset voltage:** | 15 % $U_N$ | |
| **Input current B1:** | approx. 0.3 mA | |

## Technical Data

**Output**

| | | |
|---|---|---|
| **Contacts:** | | |
| IK 7823.81: | 1 changeover contact | |
| **Thermal current $I_{th}$:** | 10 A up to 45°C<br>(see continuous current limit curve) | |
| **Switching capacity** | | |
| to AC 15 | | |
| NO contact: | 10 A / AC 230 V | IEC/EN 60 947-5-1 |
| NC contact: | 5 A / AC 230 V | IEC/EN 60 947-5-1 |
| **Electrical life** | | IEC/EN 60 947-5-1 |
| to AC 15 at 3 A, AC 230 V: | ≥ 5 x $10^5$ switching cycles | |
| **Short circuit strength** | | |
| **max. fuse rating:** | 10 A gL | IEC/EN 60 947-5-1 |
| **Mechanical life:** | ≥ 30 x $10^6$ switching cycles | |

**General Data**

| | | |
|---|---|---|
| **Operating mode:** | Continuous operation | |
| **Temperature range:** | - 20 ... + 60°C | |
| **Clearance and creepage distances** | | |
| rated impulse voltage / pollution degree: | 4 kV / 2 | IEC 60 664-1 |
| **EMC** | | |
| Electrostatic discharge: | 6 kV (air) | IEC/EN 61 000-4-2 |
| HF-irradiation: | 10 V/m | IEC/EN 61 000-4-3 |
| Fast transients: | 4 kV | IEC/EN 61 000-4-4 |
| Surge voltages between | | |
| wires for power supply: | 1 kV<br>(0.5 kV at AC/DC 24 V) | IEC/EN 61 000-4-5 |
| between wire and ground: | 2 kV | IEC/EN 61 000-4-5 |
| Interference suppression: | Limit value class B | EN 55 011 |
| **Degree of protection** | | |
| Housing: | IP 40 | IEC/EN 60 529 |
| Terminals: | IP 20 | IEC/EN 60 529 |
| **Housing:** | Thermoplastic wiht Vo behaviour according to UL subject 94 | |
| **Vibration resistance:** | Amplitude 0.35 mm<br>frequency 10 ... 55 Hz | IEC/EN 60 068-2-6 |
| **Climate resistance:** | 20 / 60 / 04 | IEC/EN 60 068-1 |
| **Terminal designation:** | EN 50 005 | |
| **Wire connection:** | 2 x 2.5 mm² solid or<br>2 x 1.5 mm² stranded wire with sleeve DIN 46 228-1/-2/-3/-4 | |
| **Wire fixing:** | Flat terminals with self-lifting clamping piece | IEC/EN 60 999-1 |
| **Mounting:** | DIN rail | IEC/EN 60 715 |
| **Weight** | | |
| IK 7823: | 70 g | |
| SK 7823: | 88 g | |

**Dimensions**

| | |
|---|---|
| **Width x heigth x depth** | |
| IK 7823: | 17.5 x 90 x 59 mm |
| SK 7823: | 17.5 x 90 x 98 mm |

## Standard Type

IK 7823.81 AC 110 ... 240 V 0.25 ... 640 s
Article number: 0047161 stock item
- Nominal voltage $U_N$: AC 110 ... 240 V
- Time range: 0.25 ... 640 s adjustable
- Width: 17.5 mm

SK 7823.81 AC 110 ... 240 V 0.25 ... 640 s
Article number: 0052258
- Nominal voltage $U_N$: AC 110 ... 240 V
- Time range: 0.25 ... 640 s adjustable
- Width: 17.5 mm

## Ordering Example

IK 7823 .81 AC 110 ... 240 V 50 / 60 Hz 0.25 ... 640 s

- 0.25 ... 640 s — Time range
- 50 / 60 Hz — Nominal frequency
- AC 110 ... 240 V — Nominal voltage
- .81 — Contacts
- IK 7823 — Type

## Characteristics

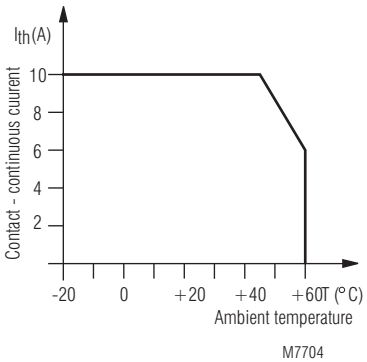


Continuous current limit curve

## Connection Example

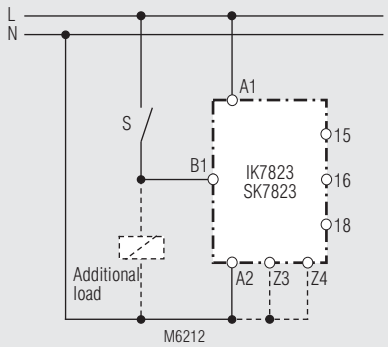


Remarks:
Z3, Z4... Programming of time range
S... Control contact for function
Contact S can also switch additional load connected inparallel to ow relay.

# MINITIMER
## Timer, Off delayed
## IK 9962, SK 9962

0239764

IK 9962 SK 9962

- According to IEC/EN 61 812-1
- Release delay, with control signal
- 8 time ranges from 0.05 s to 300 h selectable via rotational switch
- Voltage range AC/DC 12 ... 240 V for auxiliary supply and control input
- No voltfree control contact necessary
- Adjustment aid for quick setting of long time values
- LED indicators for operation, contact position and time delay
- 1 changeover contact
- As option connnection of remote potentiometer 10 kΩ
- Devices available in 2 enclosure versions:
  IK 9962: depth 59 mm, with terminals at the bottom for installation systems and industrial distribution systems according to DIN 43 880
  SK 9962: depth 98 mm, with terminals at the top for cabinets with mounting plate and cable duct
- 17.5 mm width

### Function Diagram

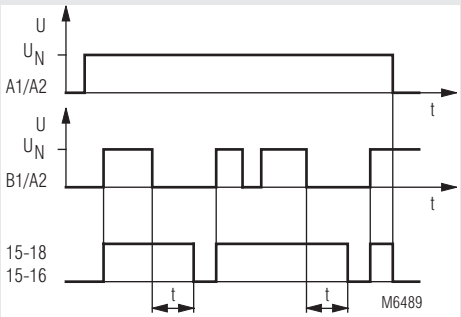


### Approvals and Markings

CE

### Application

Time dependent controllers

### Indicators

| | |
|---|---|
| green LED: | on when auxiliary voltage connected |
| yellow LED "R/t": | shows status of output relay and time delay: |
| - LED off | output relay not active; no time delay |
| - LED continuously on | output relay active; no time delay (^= B1 input active) |
| - Flashing (long on, short off) | output relay active; time delay |

### Circuit Diagrams

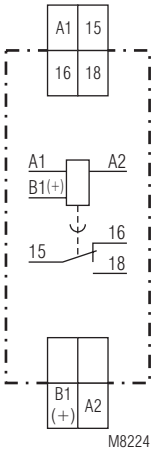


IK 9962.81
SK 9962.81

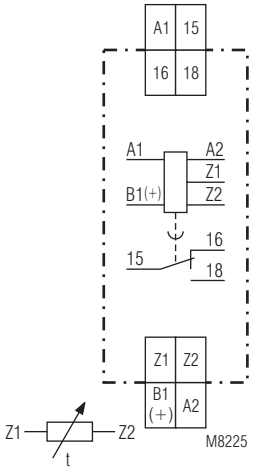


IK 9962.81/300
SK 9962.81/300

### Connection Terminals

| Terminal designation | Signal description |
|---|---|
| A1 | L / + |
| A2 | N / - |
| 15, 16, 18 | Changeover contact |
| B1(+) | Control input (control of time delay) Control with reference to A2 |
| Z1, Z2 (only at variant /300) | Input to connect a remote potentiometer for time setting |

## Notes

**Setting**
A change of the settings for time range and time will be valid immediately. Please note, that a change of time range or time setting during elapse of time can lead to unintended switching of the output contacts.

**Adjustment assistance**
The flashing period of the yellow LED is 1 s ± 4% and can be used to adjust the time. Especially on the lower end of scale and for long times it is suitable as the multiplication factors between the different time ranges are exact without tolerance.
Example:
The required time is 40 min. It has to be adjusted within the range 3 ... 300 min. The time check takes too long as several timing cycles would be necessary for a precise value.

For faster adjustment the setting is made to 0.03 ... 3 min. On this range the potentiometer should be set to 0.4 min (= 24 sec). With the right potentiometer setting the LED must show 24 flashing cycles. After that the time range is switched over to 3 ... 300 min and the setting is complete.

**Remote potentiometer**
With the variant IK/SK 9962.81/300 the time setting can also be made via remote potentiometer of 10 kOhms. It is connected to the terminals Z1-Z2. The corresponding potentiometer on the relay has to be set to min. If no remote potentiometer is required the terminals Z1-Z2 have to be linked.
The wires to the remote potentiometer should be installed separately from the lines with mains voltage. If this is not possible, a screened cable is recommendet where the shield is connected to Z1.
To terminals Z1 and Z2 no external voltage must be connected, as the unit might be damaged.
Terminals Z1-Z2 do not have a galvanic separation to terminals A1/A2!

**Control input B1**
The unit needs a continuously connected auxiliary supply on A1-A2. The timing is controlled via input B1. The control unit B1 (+ with DC) has to be supplied with voltage against A2. The control signal could be the same as the auxiliary/control voltage of A1 or any other voltage between 12 and 240 V AC or DC. Operating a parallel load (e. g. contactor) between B1 and A2 is allowed.

## Setting

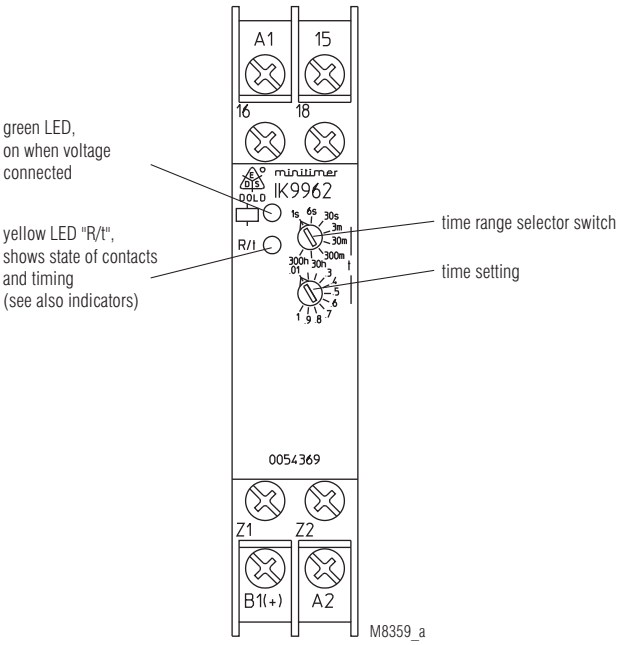

## Technical Data

### Time circuit

| | |
|---|---|
| **Time ranges:** | 8 time ranges settable via rotational switch: |
| | 0.05 ... 1 s  0.3 ... 30 min |
| | 0.06 ... 6 s  3 ... 300 min |
| | 0.3 ... 30 s  0.3 ... 30 h |
| | 0.03 ... 3 min  3 ... 300 h |
| **Time setting:** | continuous, 1:100 on relative scale |
| **Recovery time:** | |
| at DC 24 V: | approx. 15 ms |
| at DC 240 V: | approx. 50 ms |
| at AC 230 V: | approx. 80 ms |
| **Minimum on time (B1):** | |
| AC 50 Hz: | approx. 15 ms |
| DC: | approx. 5 ms |
| **Repeat accuracy:** | ± 0.5 % of selected end of scale value + 20 ms |
| **Voltage and temperature influence:** | ≤ 1 % with the complete operating range |

### Input

| | |
|---|---|
| **Auxiliary voltage $U_H$:** | AC/DC 12 ... 240 V |
| **Voltage range:** | 0.8 ... 1.1 $U_N$ |
| **Frequency range (AC):** | 45 ... 400 Hz |
| **Nominal consumption** | |
| at AC 12 V: | approx. 1.5 VA |
| at AC 24 V: | approx. 2 VA |
| at AC 240 V: | approx. 3 VA |
| at DC 12 V: | approx. 1 W |
| at DC 24 V: | approx. 1 W |
| at DC 240 V: | approx. 1 W |
| **Release voltage (A1/A2)** | |
| AC 50 Hz: | approx. 7.5 V |
| DC: | approx. 7 V |
| **Control voltage (B1/A2):** | AC/DC 12 ... 240 V |
| **Voltage range (B1/A2):** | 0.8 ... 1.1 $U_N$ |
| **Control current (B1)**: | input resistance approx. 220 kΩ in series with diode |
| **Release voltage (B1/A2)** | |
| AC 50 Hz: | approx. 5 V |
| DC: | approx. 4 V |

### Output

| | | |
|---|---|---|
| **Contacts** | | |
| IK/SK 9962.81: | 1 changeover contact | |
| **Contact material:** | AgNi | |
| **Measured nominal voltage:** | AC 250 V | |
| **Thermal current $I_{th}$:** | 4 A (see see quadratic total current limit curve) | |
| **Switching capacity** | | |
| to AC 15 | | |
| NO contact: | 3 A / AC 230 V | IEC/EN 60 947-5-1 |
| NC contact: | 1 A / AC 230 V | IEC/EN 60 947-5-1 |
| to DC 13: | 1 A / DC 24 V | |
| **Electrical life** | | |
| to AC 15 at 1 A, AC 230 V: | 1.5 x $10^5$ switching cycles | IEC/EN 60 947-5-1 |
| **Permissible switching frequency:** | 30 000 switching cycles / h | |
| **Short circuit strength max. fuse rating:** | 4 A gG / gL | IEC/EN 60 947-5-1 |
| **Mechanical life:** | ≥ 30 x $10^6$ switching cycles | |

## Technical Data

### General Data

| | | |
|---|---|---|
| **Operating mode:** | Continuous operation | |
| **Temperature range:** | | |
| Operation: | - 40 ... + 60 °C (higher temperature with limitations see quadratic total current limit curve) | |
| Storage: | - 40 ... + 70 °C | |
| **Relative air humidity:** | 93 % at 40 °C | |
| **Altitude:** | < 2.000 m | |
| **Clearance and creepage distances** | | |
| rated impulse voltage / pollution degree: | 4 kV / 2 (basis insulation) | IEC 60 664-1 |
| Overvoltage category: | III | |
| Insulation test voltage, type test: | 2.5 kV; 1 min | |
| **EMC** | | |
| Electrostatic discharge: | 8 kV (air) | IEC/EN 61 000-4-2 |
| HF irradiation | | |
| 80 MHz ... 1 GHz: | 20 V / m | IEC/EN 61 000-4-3 |
| 1 GHz ... 2.7 GHz: | 10 V / m | IEC/EN 61 000-4-3 |
| Fast transients: | | |
| A1/A2 and B1(+)/A2 | 4 kV | IEC/EN 61 000-4-4 |
| Z1/Z2: | 2 kV | IEC/EN 61 000-4-4 |
| Surge voltages between | | |
| wires for power supply: | 2 kV | IEC/EN 61 000-4-5 |
| between wire and ground: | 4 kV | IEC/EN 61 000-4-5 |
| HF-wire guided: | 10 V | IEC/EN 61 000-4-6 |
| Interference suppression: | Limit value class B | EN 55011 |
| **Degree of protection** | | |
| Housing: | IP 40 | IEC/EN 60 529 |
| Terminals: | IP 20 | IEC/EN 60 529 |
| **Housing:** | Thermoplastic with V0 behaviour according to UL subject 94 | |
| **Vibration resistance:** | Amplitude 0.35 mm, frequency 10 ... 55 Hz, | IEC/EN 60 068-2-6 |
| **Climate resistance:** | 40 / 060 / 04 | IEC/EN 60 068-1 |
| **Terminal designation:** | EN 50 005 | |
| **Wire connection:** | DIN 46 228-1/-2/-3/-4 | |
| Cross section: | 2 x 2.5 $mm^2$ solid or 2 x 1.5 $mm^2$ stranded wire with sleeve | |
| Stripping length: | 10 mm | |
| **Wire fixing:** | Flat terminals with self-lifting clamping piece | IEC/EN 60 999-1 |
| **Fixing torque:** | 0.8 Nm | |
| **Mounting:** | DIN rail | IEC/EN 60 715 |
| **Weight:** | | |
| IK 9962: | approx. 65 g | |
| SK 9962: | approx. 84 g | |

### Dimensions

| | |
|---|---|
| **Width x height x depth:** | |
| IK 9962: | 17.5 x 90 x 59 mm |
| SK 9962: | 17.5 x 90 x 98 mm |

## Standard Types

IK 9962.81 AC/DC 12 ... 240 V 0.05 ... 300 h

| | |
|---|---|
| Article number: | 0054368 |
| • Output: | 1 changeover contact |
| • Auxiliary voltage $U_H$: | AC/DC 12 ... 240 V |
| • Time ranges: | 0.05 ... 300 h |
| • Width: | 17.5 mm |

SK 9962.81 AC/DC 12 ... 240 V 0.05 ... 300 h

| | |
|---|---|
| Article number: | 0056040 |
| • Output: | 1 changeover contact |
| • Auxiliary voltage $U_H$: | AC/DC 12 ... 240 V |
| • Time ranges: | 0.05 ... 300 h |
| • Width: | 17.5 mm |

## Variant

IK/SK 9962.81/300: Connection facility for a remote potentiometer 10 kΩ to adjust the time

### Ordering example for variant

IK 9962 .81 /_ _ _ AC/DC 12 ... 240 V 0.05 s ... 300 h

- Time range
- Auxiliary voltage
- Variant, if required
- Contacts
- Type

## Characteristics

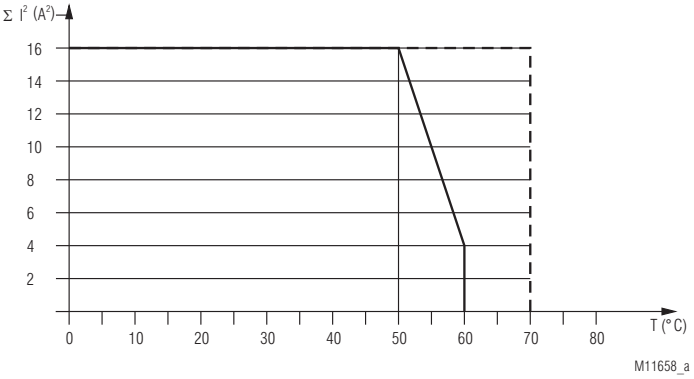


device mounted away from heat generation components.

device mounted without distance heated by devices with same load.

## Connection Examples

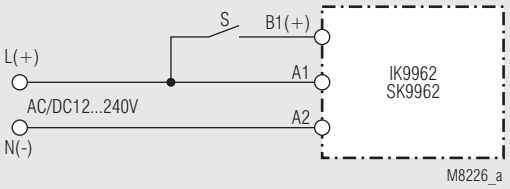


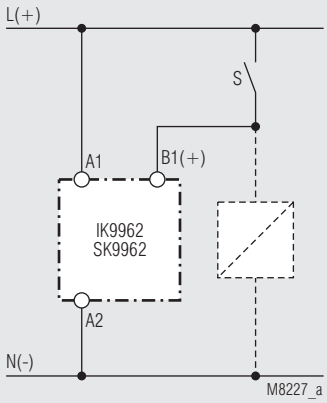


Control with parallel connected load

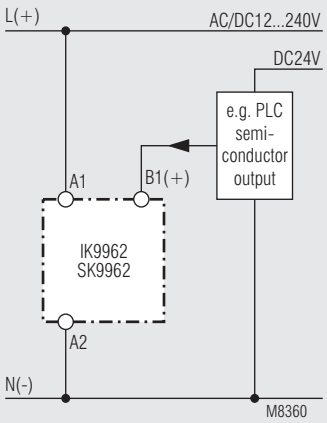


Connection with 2 different control voltages

## Accessories

AD 3: External potentiometer 10 kΩ
Artikelnummer: 0028962

The external potentiometer is used for remote setting of the time delay. The internal potentiometer of the timer must be set to min. time delay.

Degree of protection front side: IP 60

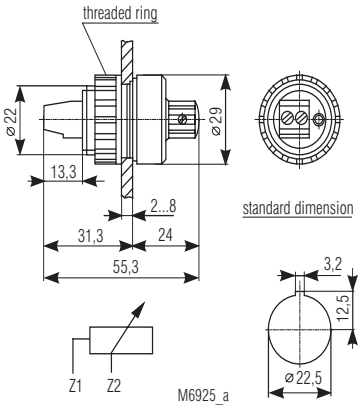

# MINITIMER
## Timer, Release Delay
## BC 7933N

0225284

- According to IEC/EN 61 812-1
- Release delay with control signal
- Settable release delay between 0.05 s and 10 h
- With auxiliary voltage
- Wide voltage range AC 110 ... 240 V
- Control input operated with nominal voltage, No voltage free contact necessary
- LED indicator for status of contact
- 1 changeover contact
- Wire connection: also 2 x 1.5 mm² stranded ferruled (isolated), DIN 46 228-1/-2/-3/-4 or 2 x 2.5 mm² stranded ferruled DIN 46 228-1/-2/-3
- Width 22.5 mm

### Function Diagram

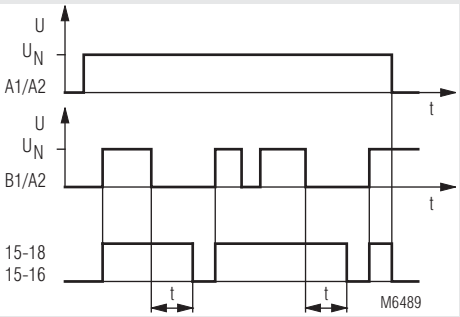


### Approvals and Markings

CE

### Applications

Time-dependent control circuits

### Indicators

| | |
|---|---|
| yellow LED: | on, when output relay activated (contact 15 - 18 closed) |

### Circuit Diagrams

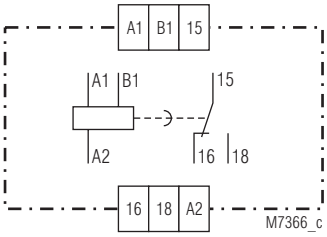


BC 7933N

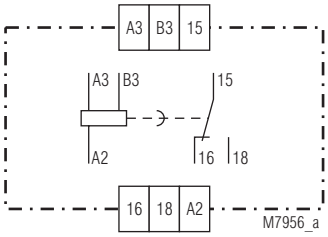


BC 7933N/200

### Notes

The relay needs a supply voltage continuously connected to A1-A2.
At relays with auxiliary supply < AC 180 V the control input must not be operated before the auxiliary supply is present for at least 150 ms. In this case also the recovery time after time delay is 150 ms.

### Connection Terminals

| Terminal designation | Signal description |
|---|---|
| A1, A3, A2 | Operating voltage |
| B1, B3 | Control input |
| 15, 16, 18 | Changeover contact |

## Technical Data

### Time Circuit

| | | |
|---|---|---|
| **Time ranges:** | 0.05 ... 1 s | 0.5 ... 10 m |
| | 0.15 ... 3 s | 1.5 ... 30 m |
| | 0.5 ... 10 s | 0.15 ... 3 h |
| | 1.5 ... 30 s | 0.5 ... 10 h |
| | 5 ... 100 s | |
| | 15 ... 300 s | |
| **Time setting:** | infinitely variable 1:20 | |
| **Min. closing time:** | (Control input B1) | |
| | AC: 15 ms | |
| | DC: 5 ms | |
| **Recovery time:** | < 50 ms | |
| **Repeat accuracy:** | ≤ 0.5 % + 10 ms | |
| **Voltage influence:** | ≤ 1 % | |
| **Temperature influence:** | ≤ 0.25 % / K | |

### Input

| | | |
|---|---|---|
| **Nominal voltage $U_N$** | | |
| **(**Operating voltage): | (A1/A2 and B1/A2) | |
| | AC 110 ... 240 V | |
| | AC 42 ... 48 V / DC 48 V | |
| | AC/DC 24 V | |
| **Voltage range:** | AC: 0.8 ... 1.1 $U_N$ | |
| | DC: 0.9 ... 1.25 $U_N$ | |
| **Nominal consumption:** | AC: 4 VA | |
| | DC: 0.4 W | |
| **Nominal frequency:** | AC: 50 / 60 Hz | |
| **Frequency range:** | AC: 45 ... 65 Hz | |
| **Reset voltage:** | (Control input B1) | |
| | ≥ 15 % $U_N$ | |

### Output

| | | |
|---|---|---|
| **Contacts:** | 1 changeover contact | |
| **Contact material:** | AgNi | |
| **Measured nominal voltage:** | AC 250 V | |
| **Thermal current $I_{th}$:** | 4 A | |
| **Switching capacity** | | |
| to AC 15 | | |
| NO contact: | 3 A / AC 230 V | IEC/EN 60 947-5-1 |
| NC contact: | 1 A / AC 230 V | IEC/EN 60 947-5-1 |
| **Electrical contact life** | | IEC/EN 60 947-5-1 |
| to AC 15 at 1 A, AC 230 V: | 1.5 x $10^5$ switching cycles | |
| **Permissible switching frequency:** | 36 000 switching cycles / h | |
| **Short circuit strength max. fuse rating:** | 4 A gG /gL | IEC/EN 60 947-5-1 |
| **Mechanical life:** | $10^8$ switching cycles | |

### General Data

| | | |
|---|---|---|
| **Operating mode:** | Continuous operation | |
| **Temperature range** | | |
| Operation: | - 20 ... + 60 °C | |
| Storage: | - 25 ... + 70 °C | |
| **Relative air humidity:** | 95 % at 40 °C | |
| **Altitude:** | < 2.000 m | |
| **Clearance and creepage distances** | | |
| overvoltge category / pollution degree: | 4 kV / 2 (basis insulation) | IEC 60 664-1 |
| Overvoltage category: | III | |
| Insulation test voltage, type test: | 2.5 kV; 1 min | |
| **EMC** | | |
| Electrostatic discharge: | 4 kV (contact) | IEC/EN 61 000-4-2 |
| | 8 kV (air) | IEC/EN 61 000-4-2 |
| HF irradiation | | |
| 80 MHz ... 1 GHz: | 10 V / m | IEC/EN 61 000-4-3 |
| 1 GHz ... 2.5 GHz: | 3 V / m | IEC/EN 61 000-4-3 |
| 2.5 GHz ... 2.7 GHz | 1 V / m | IEC/EN 61 000-4-3 |
| Fast transients: | 2 kV | IEC/EN 61 000-4-4 |
| Surge voltages | | |
| between A1/A2: | 1 kV | IEC/EN 61 000-4-5 |
| between B1/A2: | 1 kV | IEC/EN 61 000-4-5 |
| between A1, A2/PE: | 2 kV | IEC/EN 61 000-4-5 |
| HF-wire guided: | 10 V | IEC/EN 61 000-4-6 |
| Interference suppression: | Limit value class B | EN 55 011 |

## Technical Data

| | | |
|---|---|---|
| **Degree of protection** | | |
| Housing: | IP 40 | IEC/EN 60 529 |
| Terminals: | IP 20 | IEC/EN 60 529 |
| **Housing:** | Thermoplastic with V0 behaviour according to UL subject 94 | |
| **Vibration resistance:** | Amplitude 0.35 mm frequency 10 ... 55 Hz | IEC/EN 60 068-2-6 |
| **Climate resistance:** | 20 / 060 / 04 | IEC/EN 60 068-1 |
| **Terminal designation:** | EN 50 005 | |
| **Wire connection:** | | |
| Cross section: | 1 x 4 mm² solid or<br>1 x 2.5 mm² stranded ferruled (isolated) or<br>2 x 1.5 mm² stranded ferruled (isolated) DIN 46 228-1/-2/-3/-4 or<br>2 x 2.5 mm² stranded ferruled DIN 46 228-1/-2/-3 | |
| Insulation of wires or sleeve length: | 10 mm | |
| **Wire fixing:** | Terminal screws M 3.5<br>Box terminal with wire protection | |
| **Fixing torque:** | 0.8 Nm | |
| **Mounting:** | DIN rail | IEC/EN 60 715 |
| **Weight:** | 80 g | |

### Dimensions

| | |
|---|---|
| **Width x height x depth:** | 22.5 x 84 x 97 mm |

### Standard Type

BC 7933N.81 AC 110 ... 240 V 50/60 Hz 0.5 ... 10 s

Article number: 0052777

- Front colour grey, with box terminals
- Output: 1 changeover contact
- Nominal voltage $U_N$: AC 110 ... 240 V
- Time range: 0.5 ... 10 s
- Width: 22.5 mm

### Variant

| | |
|---|---|
| BC 7933N.81/200: | Special terminal designation:<br>A3 corresponds A1, B3 corresponds B1 |

**Ordering example for variant**

BC 7933N .81 /_ _ _ AC 110 ... 240 V 50 / 60 Hz 10 s

- Time delay
- Nominal frequency
- Nominal voltage
- Variant, if required
- Contact
- Type

### Connection Examples

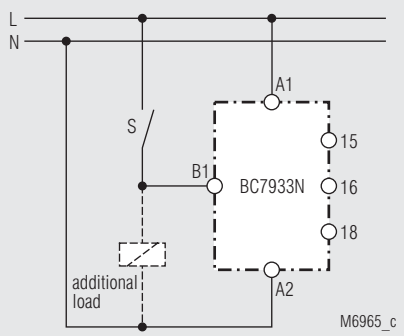

# MINITIMER
## Timer, Release Delay
## BC 7939N

0255080

- According to IEC/EN 61 812-1
- Release delay with control signal
- 8 settable time ranges between 0.05 s and 10 h
- Settable release delay
- With auxiliary voltage
- Wide voltage range AC 110 ... 240 V
- Control input operated with nominal voltage, No voltage free contact necessary
- LED indicator for status of contact
- 1 changeover contact
- Wire connection: also 2 x 1.5 mm² stranded ferruled (isolated), DIN 46 228-1/-2/-3/-4 or 2 x 2.5 mm² stranded ferruled DIN 46 228-1/-2/-3
- Width 22.5 mm

### Function Diagram

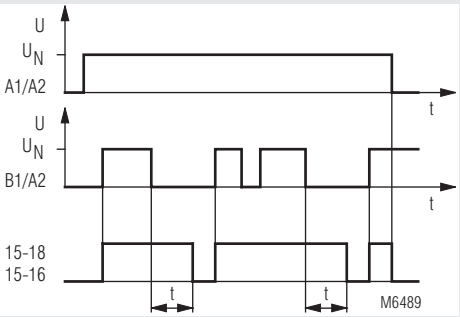


### Circuit Diagram

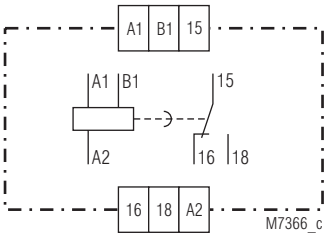


### Connection Terminals

| Terminal designation | Signal description |
|---|---|
| A1, A2 | Operating voltage |
| B1 | Control input |
| 15, 16, 18 | Changeover contact |

### Approvals and Markings

CE

### Applications

Time-dependent control circuits

### Indicators

| | |
|---|---|
| yellow LED: | on, when output relay activated (contact 15 - 18 closed) |

### Notes

The relay needs a supply voltage continuously connected to A1-A2.
At relays with auxiliary supply < AC 180 V the control input must not be operated before the auxiliary supply is present for at least 150 ms. In this case also the recovery time after time delay is 150 ms.

## Technical Data

### Time Circuit

| | |
|---|---|
| **Time ranges:** | 8 settalbe time ranges:<br>0.05 ... 1 s  0.5 ... 10 m<br>0.15 ... 3 s  1.5 ... 30 m<br>0.5 ... 10 s  0.15 ... 3 h<br>1.5 ... 30 s  0.5 ... 10 h<br>5 ... 100 s<br>15 ... 300 s |
| **Time setting:** | infinitely variable 1:10 |
| **Min. closing time:** | (Control input B1)<br>AC: 15 ms<br>DC: 5 ms |
| **Recovery time:** | < 50 ms |
| **Repeat accuracy:** | ≤ 0.5 % + 10 ms |
| **Voltage influence:** | ≤ 1 % |
| **Temperature influence:** | ≤ 0.25 % / K |

### Input

| | |
|---|---|
| **Nominal voltage $U_N$**<br>**(**Operating voltage): | (A1/A2 and B1/A2)<br>AC 110 ... 240 V<br>AC 42 ... 48 V / DC 48 V<br>AC/DC 24 V |
| **Voltage range:** | AC: 0.8 ... 1.1 $U_N$<br>DC: 0.9 ... 1.25 $U_N$ |
| **Nominal consumption:** | AC: 4 VA<br>DC: 0.4 W |
| **Nominal frequency:** | AC: 50 / 60 Hz |
| **Frequency range:** | AC: 45 ... 65 Hz |
| **Reset voltage:** | (Control input B1)<br>≥ 15 % $U_N$ |

### Output

| | | |
|---|---|---|
| **Contacts:** | | |
| BC 7939N.81: | 1 changeover contact | |
| **Contact material:** | AgNi | |
| **Measured nominal voltage:** | AC 250 V | |
| **Thermal current $I_{th}$:** | 4 A | |
| **Switching capacity** | | |
| to AC 15 | | |
| NO contact: | 3 A / AC 230 V | IEC/EN 60 947-5-1 |
| NC contact: | 1 A / AC 230 V | IEC/EN 60 947-5-1 |
| **Electrical contact life** | | IEC/EN 60 947-5-1 |
| to AC 15 at 1 A, AC 230 V: | 1.5 x $10^5$ switching cycles | |
| **Permissible switching frequency:** | 36 000 switching cycles / h | |
| **Short circuit strength max. fuse rating:** | 4 A gG / gL | IEC/EN 60 947-5-1 |
| **Mechanical life:** | $10^8$ switching cycles | |

### General Data

| | | |
|---|---|---|
| **Operating mode:** | Continuous operation | |
| **Temperature range** | | |
| Operation: | - 20 ... + 60 °C | |
| Storage: | - 25 ... + 70 °C | |
| **Relative air humidity:** | 95 % at 40 °C | |
| **Altitude:** | < 2.000 m | |
| **Clearance and creepage distances** | | |
| overvoltge category / pollution degree: | 4 kV / 2 (basis insulation) | IEC 60 664-1 |
| Overvoltage category: | III | |
| Insulation test voltage, type test: | 2.5 kV; 1 min | |
| **EMC** | | |
| Electrostatic discharge: | 4 kV (contact) | IEC/EN 61 000-4-2 |
| | 8 kV (air) | IEC/EN 61 000-4-2 |
| HF irradiation | | |
| 80 MHz ... 1 GHz: | 10 V / m | IEC/EN 61 000-4-3 |
| 1 GHz ... 2.5 GHz: | 3 V / m | IEC/EN 61 000-4-3 |
| 2.5 GHz ... 2.7 GHz | 1 V / m | IEC/EN 61 000-4-3 |
| Fast transients: | 2 kV | IEC/EN 61 000-4-4 |
| Surge voltages | | |
| between A1/A2: | 1 kV | IEC/EN 61 000-4-5 |
| between B1/A2: | 1 kV | IEC/EN 61 000-4-5 |
| between A1, A2/PE: | 2 kV | IEC/EN 61 000-4-5 |
| HF-wire guided: | 10 V | IEC/EN 61 000-4-6 |
| Interference suppression: | Limit value class B | EN 55 011 |

## Technical Data

| | | |
|---|---|---|
| **Degree of protection** | | |
| Housing: | IP 40 | IEC/EN 60 529 |
| Terminals: | IP 20 | IEC/EN 60 529 |
| **Housing:** | Thermoplastic with V0 behaviour according to UL subject 94 | |
| **Vibration resistance:** | Amplitude 0.35 mm<br>frequency 10 ... 55 Hz | IEC/EN 60 068-2-6 |
| **Climate resistance:** | 20 / 060 / 04 | IEC/EN 60 068-1 |
| **Terminal designation:** | EN 50 005 | |
| **Wire connection:** | | |
| Cross section: | 1 x 4 mm² solid or<br>1 x 2.5 mm² stranded ferruled (isolated) or<br>2 x 1.5 mm² stranded ferruled (isolated) DIN 46 228-1/-2/-3/-4 or<br>2 x 2.5 mm² stranded ferruled DIN 46 228-1/-2/-3 | |
| Insulation of wires or sleeve length: | 10 mm | |
| **Wire fixing:** | Terminal screws M 3.5<br>Box terminal with wire protection | |
| **Fixing torque:** | 0.8 Nm | |
| **Mounting:** | DIN rail | IEC/EN 60 715 |
| **Weight:** | 80 g | |

### Dimensions

| | |
|---|---|
| **Width x height x depth:** | 22.5 x 84 x 97 mm |

### Standard Type

BC 7939N.81  AC 110 ... 240 V  50/60 Hz  16 h

Article number: 0056391

- Front colour grey, with box terminals
- Output: 1 changeover contact
- Nominal voltage $U_N$: AC 110 ... 240 V
- Time range: 0.05 ... 16 h
- Width: 22.5 mm

### Ordering Example

BC 7939N  .81  AC 110 ... 240 V  50 / 60 Hz  0.05 ... 16 h

- Time delay
- Nominal frequency
- Nominal voltage
- Contact
- Type

### Connection Examples

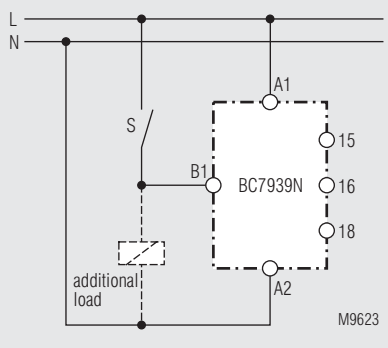

# MINITIMER
## Timer, release delay
## MK 7863

0226795

**Your Adventages**
- Simple control with operating voltage
- Energy saving, i.e. no consumption after disconnection of control voltage

**Features**
- According to IEC/EN 61 812-1
- Release delay, without control signal
- No-voltage safe
- Delay up to 300 s
- Repeat accuracy < ± 3 %
- 1 changeover contact
- Width 22.5 mm

### Product Description

True off delayed timer. Connecting the operating voltage will energise the relay, contact 15-18 closes. Removing the operating voltage starts the time delay. After elapse of time, the relay de-energises to 15-16.

### Approvals and Markings

### Function diagramm

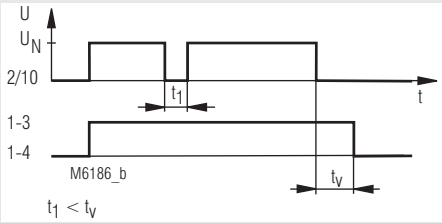


### Indicator

| | |
|---|---|
| LED: | on, when operating voltage applied |

### Circuit Diagram

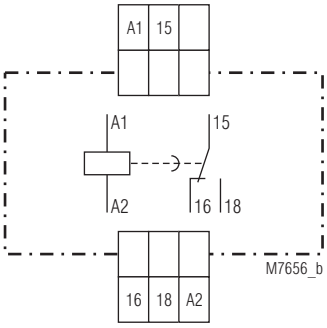


### Technical Data

**Time circuit**

| | | |
|---|---|---|
| **Time ranges:** | 0.05 ... 1 s | 0.15 ... 3 s |
| | 0.5 ... 10 s | 1.5 ... 30 s |
| | 5 ... 100 s | 15 ... 300 s |
| **Time setting:** | steppless on absolute scale | |
| **Recovery time:** | 10 ms | |
| **Repeat accuracy:** | < ± 3 % | |
| **Min. setting time:** | 100 ms | |
| **Voltage influence:** | < ± 3 % | |
| **Temperature influence:** | < 0.2 % / K | |

**Input**

| | | |
|---|---|---|
| **Nominal voltage $U_N$ (operating voltage):** | AC/DC 24, 42 V with pole protection<br>AC 110 ... 127, 230, 240 V | |
| **Voltage range:** | 0.8 ... 1.1 $U_N$ | |
| **Nominal consumption:** | AC 230 V / 9 VA | |
| **Nominal frequency:** | 50 / 60 Hz | |

**Output**

| | | |
|---|---|---|
| **Contacts:** | 1 changeover contact, delayed | |
| **Contact material:** | $AgSnO_2$ | |
| **Measured nominal voltage:** | AC 250 V | |
| **Thermal current $I_{th}$:** | 5 A | |
| **Switching capacity** | | |
| to AC 15 | | |
| NO contact: | 3 A / AC 230 V | IEC/EN 60 947-5-1 |
| NC contact: | 1 A / AC 230 V | IEC/EN 60 947-5-1 |
| **Electrical life** | | IEC/EN 60 947-5-1 |
| to AC 15 at 3 A, AC 230 V: | 5 x $10^5$ switching cycles | |
| **Permissible switching frequency:** | 3 000 switching cycles / h | |
| **Short circuit strength max. fuse rating:** | 4 A gG / gL | IEC/EN 60 947-5-1 |
| **Mechanical life:** | 50 x $10^6$ switching cycles | |

### Connection Terminals

| Terminal designation | Signal description |
|---|---|
| A1 / A2 | Operating voltage |
| 15, 16, 18 | Changeover contact |

## Technical Data

### General Data

| | | |
|---|---|---|
| **Operating mode:** | Continuous operation | |
| **Temperature range:** | | |
| Operation: | - 20 ... + 60 °C | |
| Storage: | - 25 ... + 75 °C | |
| **Altitude:** | < 2.000 m | |
| **Relative air humidity:** | 95 % at 40 °C | |
| **Clearance and creepage distances** | | |
| rated impulse voltage / pollution degree: | 4 kV / 3 (basis insulation) | IEC 60 664-1 |
| Overvoltage category: | III | |
| Insulation test voltage, type test: | 2.5 kV; 1 min | |
| **EMC** | | |
| Electrostatic discharge: | 8 kV (air) | IEC/EN 61 000-4-2 |
| HF irradiation | | |
| 80 MHz ... 1 GHz: | 12 V / m | IEC/EN 61 000-4-3 |
| 1 GHz ... 2.7 GHz: | 10 V / m | IEC/EN 61 000-4-3 |
| Fast transients: | 2 kV | IEC/EN 61 000-4-4 |
| Surge voltages between | | |
| wires for power supply: | 1 kV | IEC/EN 61 000-4-5 |
| between wire and ground: | 2 kV | IEC/EN 61 000-4-5 |
| HF-wire guided: | 10 V | |
| Interference suppression: | Limit value class B | EN 55 011 |
| **Degree of protection** | | |
| Housing: | IP 40 | IEC/EN 60 529 |
| Terminals: | IP 20 | IEC/EN 60 529 |
| **Housing:** | Thermoplast with V0 behaviour according to UL Subj. 94 | |
| **Vibration resistance:** | Amplitude 0.35 mm frequency 10 ... 55 Hz | IEC/EN 60 068-2-6 |
| **Climate resistance:** | 20 / 060 / 04 | IEC/EN 60 068-1 |
| **Terminal designation:** | EN 50 005 | |
| **Wire connection:** | 2 x 1.5 mm² solid or 2 x 1.0 mm² stranded wire with sleeve DIN 46 288-1/-2/-3/-4 | |
| Insulation of wires or sleeve length: | 8 mm | |
| **Wire fixing:** | Flat terminals with self-lifting clamping piece | IEC/EN 60 999-1 |
| **Fixing torque:** | 0,4 Nm | |
| **Mounting:** | DIN-rail | IEC/EN 60 715 |
| **Weight:** | 270 g | |

### Dimensions

**Width x height x depth**: 22.5 x 82 x 99 mm

## Standard Type

MK 7863.81 AC 230 V 50/60 Hz 1.5 ... 30 s

| | |
|---|---|
| Article number: | 0024446 |
| • Output: | 1 changeover contact, delayed |
| • Nominal voltage $U_N$: | AC 230 V |
| • Time range: | 1.5 ... 30 s |
| • Width: | 22.5 mm |

## Ordering example

MK 7863 .81 AC 230 V 50 / 60 Hz 15 ... 300 s

- 15 ... 300 s — Time range
- 50 / 60 Hz — Nominal frequency
- AC 230 V — Nominal voltage
- .81 — Contacts
- MK 7863 — Type

## Accessories

| | |
|---|---|
| ET 4752-143: | Marking plate<br>Article number: 0043203 |

# MINITIMER
## Timer, Release Delay
## MK 7873N

0273565

- According to IEC/EN 61 812-1
- Release delay, without control signal
- No-voltage safe
- Delay up to 300 s
- Repeat accuracy ≤ ± 0.5 %
- No recovery time
- With large voltage range AC/DC 24 ... 240 V
- LED display for power supply
- 2 changeover contacts
- Wire connection: also 2 x 1.5 mm² stranded ferruled, or 2 x 2.5 mm² solid DIN 46 228-1/-2/-3/-4
- With pluggable terminal blocks for easy exchange of devices
  - with screw terminals
  - or with cage clamp terminals
- Width 22.5 mm

### Function Diagram

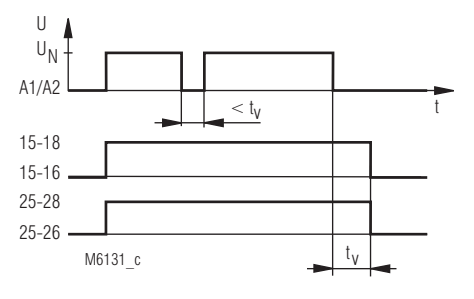


### Approvals and Markings

CE

c UL US LISTED
Canada / USA

### Application

Time dependent controls for industrial and railway applications.

### Indicators

LED: on, when supply connected

### Circuit Diagram

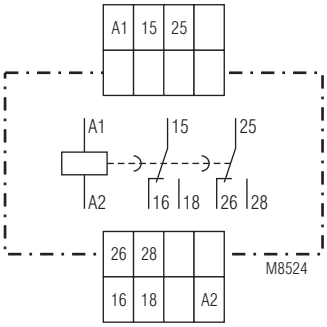


MK 7873N.82

### Connection Terminals

| Terminal designation | Signal description |
|---|---|
| A1, A2 | Operating voltage |
| 15, 16, 18, 25, 26, 28 | Changeover contacts |

## Technical Data

**Time circuit**

| | | |
|---|---|---|
| **Time ranges:** | 0.05 ... 1 s | 0.15 ... 3 s |
| | 0.5 ... 10 s | 1.5 ... 30 s |
| | 5 ... 100 s | 15 ... 300 s |
| **Time setting:** | steppless | |
| **Minimum switch-on time of the control input** | | |
| for DC 24 V: | 150 ms | |
| for UC 220 V: | 25 ms | |
| **Recovery time** | | |
| tw 50 / 100: | 0 | |
| **Repeat accuracy:** | ≤ ± 0.5 % of set value | |
| **Voltage influence:** | ≤ 0.5 % | |
| **Temperature influence:** | < 0.2 % / K | |

**Input**

| | | |
|---|---|---|
| **Nominal voltage $U_N$:** | | |
| **(Operating voltage):** | AC/DC 24 ... 240 V | |
| **Voltage range:** | AC 19.2 ... 264 V | |
| | DC 21.6 ... 300 V | |
| **Nominal consumption** | | |
| Effective power: | 0.8 W | |
| **Frequency range:** | 45 ... 400 Hz | |
| **Release voltage:** | 10 V | |

**Output**

| | | |
|---|---|---|
| **Contacts**: | 2 delayed changeover contacts | |
| **Contact material:** | $AgSnO_2$ + 0.2 µm Au | |
| **Measured nominal voltage:** | AC 250 V | |
| **Thermal current $I_{th}$:** | 5 A | |
| **Switching capacity** | | |
| to AC 15 | | |
| NO contact: | 3 A / AC 230 V | IEC/EN 60 947-5-1 |
| NC contact: | 1 A / AC 230 V | IEC/EN 60 947-5-1 |
| to DC 13 at 0.1 Hz: | 1 A / DC 24 V | IEC/EN 60 947-5-1 |
| **Electrical life** | | IEC/EN 60 947-5-1 |
| at AC 230 V, 6 A, cos φ = 1: | 8 x $10^5$ switching cycles | |
| **Permissible operating frequency:** | | |
| for time ranges ≤ 10 s: | 1 400 switching cycles / h | |
| for time ranges ≥ 30 s: | 700 switching cycles / h | |
| **Short circuit strength** | | |
| **max. fuse rating:** | 6 A gG / gL | IEC/EN 60 947-5-1 |
| **Mechanical life:** | 30 x $10^6$ switching cycles | |

**General Data**

| | | |
|---|---|---|
| **Operating mode:** | Continuous operation | |
| **Temperature range:** | | |
| Operation: | - 20 ... + 60°C | |
| Storage: | - 25 ... + 60°C | |
| **Relative air humidity:** | 93 % at 40°C | |
| **Altitude:** | < 2,000 m | |
| **Clearance and creepage distances** | | |
| rated impulse voltage / pollution degree: | 4 kV / 2 (basis insulation) | IEC 60 664-1 |
| Overvoltage category: | III | |
| Insulation test voltage, type test: | 2.5 kV; 1 min | |
| **EMC** | | |
| Electrostatic discharge: | 8 kV (air) | IEC/EN 61 000-4-2 |
| HF-irradiation | | |
| 80 MHz ... 1 GHz: | 12 V / m | IEC/EN 61 000-4-3 |
| 1 GHz ... 2.7 GHz: | 5 V / m | IEC/EN 61 000-4-3 |
| Fast transients | 2 kV | IEC/EN 61 000-4-4 |
| Surge voltages between wires for power supply: | 1 kV | IEC/EN 61 000-4-5 |
| HF wire guided: | 10 V | IEC/EN 61 000-4-6 |
| Interference suppression: | Limit value class B | EN 55 011 |
| **Degree of protection:** | | |
| Housing: | IP 40 | IEC/EN 60 529 |
| Terminals: | IP 20 | IEC/EN 60 529 |
| **Housing:** | Thermoplastic with V0 behaviour according to UL subject 94 | |
| **Vibration resistance:** | Amplitude 0.35 mm, frequency 10 ... 55 Hz, | IEC/EN 60 068-2-6 |
| **Climate resistance:** | 20 / 060 / 04 | IEC/EN 60 068-1 |
| **Terminal designation:** | EN 50 005 | |

## Technical Data

| | | |
|---|---|---|
| **Wire connection** | | DIN 46 228-1/-2/-3/-4 |
| **Screw terminals (integrated):** | 1 x 4 $mm^2$ solid or<br>1 x 2.5 $mm^2$ stranded ferruled or<br>2 x 1.5 $mm^2$ stranded ferruled or<br>2 x 2.5 $mm^2$ solid | |
| Insulation of wires or sleeve length: | 8 mm | |
| **Plug in with screw terminals** | | |
| max. cross section for connection: | 1 x 2.5 $mm^2$ solid or<br>1 x 2.5 $mm^2$ stranded ferruled | |
| Insulation of wires or sleeve length: | 8 mm | |
| **Plug in with cage clamp terminals** | | |
| max. cross section for connection: | 1 x 4 $mm^2$ solid or<br>1 x 2.5 $mm^2$ stranded ferruled | |
| min. cross section for connection: | 0.5 $mm^2$ | |
| Insulation of wires or sleeve length: | 12 $^{\pm 0.5}$ mm | |
| **Wire fixing:** | Plus-minus terminal screws M 3.5 box terminals with wire protection or cage clamp terminals | |
| **Fixing torque:** | 0.8 Nm | |
| **Mounting:** | DIN rail | IEC/EN 60 715 |
| **Weight:** | 132 g | |

**Dimensions**

| | |
|---|---|
| **Width x height x depth:** | |
| MK 7873N: | 22.5 x 90 x 97 mm |
| MK 7873N PC: | 22.5 x 111 x 97 mm |
| MK 7873N PS: | 22.5 x 104 x 97 mm |

## Classification to DIN EN 50155

| | | |
|---|---|---|
| **Vibration and shock resistance:** | Category 1, Class B | IEC/EN 61 373 |
| **Ambient temperature:** | T1 compliant<br>T2, T3 and TX with operational limitations | |
| **Protective coating of the PCB:** | No | |

## UL-Data

| | |
|---|---|
| **Switching capacity:** | |
| Ambient temperature 60°C: | Pilot duty B300<br>5A 250Vac G.P.<br>5A 24Vdc G.P. |
| **Wire connection:** | 60°C / 75°C copper conductors only |
| Screw terminals fixed: | AWG 20 - 12 Sol/Str Torque 0.8 Nm |
| Plug in screw: | AWG 20 - 14 Sol Torque 0.8 Nm<br>AWG 20 - 16 Str Torque 0.8 Nm |
| Plug in cage clamp: | AWG 20 - 12 Sol/Str |

**Technical data that is not stated in the UL-Data, can be found in the technical data section.**

## Standard Type

| | |
|---|---|
| MK 7873N.82/61 AC/DC 24 ... 240V 1.5 ... 30 s | |
| Article number: | 0054462 |
| • Output: | 2 changeover contacts |
| • Nominal voltage $U_N$: | AC/DC 24 ... 240 V |
| • Time range: | 1.5 ... 30 s |
| • Width: | 22.5 mm |

## Ordering Example

MK 7873N .82 _ _ /61 AC/DC 24 ... 240 V 5 ... 100 s

- Time range
- Nominal voltage
- UL-approval
- Type of terminals
  without indication:
  terminal blocks fixed
  with screw terminals
  PC (plug in cage clamp):
  pluggable terminal blocks
  with cage clamp terminals
  PS (plug in screw):
  pluggable terminal blocks
  with screw terminals
- Contacts
- Type

## Options with Pluggable Terminal Blocks

Screw terminal
(PS/plugin screw)

Cage clamp
(PC/plugin cage clamp)

## Notes

Removing the terminal blocks with cage clamp terminals

1. The unit has to be disconnected.
2. Insert a screwdriver in the side recess of the front plate.
3. Turn the screwdriver to the right and left.
4. Please note that the terminal blocks have to be mounted on the belonging plug in terminations.

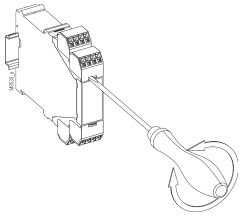

# MINITIMER
## Timer, Release Delay
## MK 9961

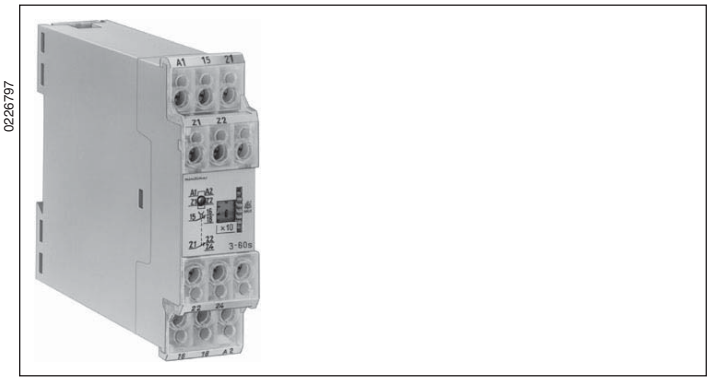


- According to IEC/EN 61 812-1
- Delay up to 600 s
- Repeat accuracy < ± 1 %
- Without auxiliary voltage
- Available with instantaneous contact
- Safe resetting
- Remote potentiometer connection to terminal Z1 - Z2 possible
- 2-wire proximity sensor control
- Width 22.5 mm

### Function Diagram

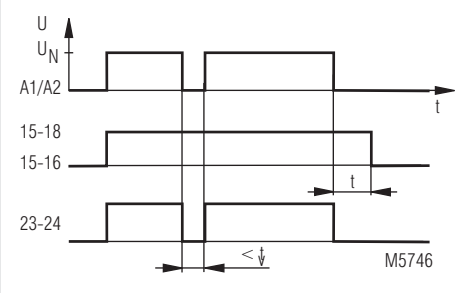


### Circuit Diagrams

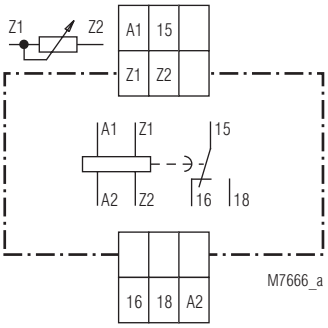


MK 9961.81

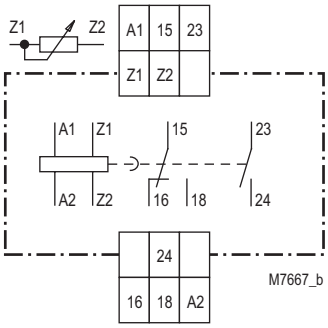


MK 9961.35

### Approvals and Markings

CE | c UL us LISTED * Canada / USA

* see variant

### Indication

| | |
|---|---|
| LED: | on when operating voltage applied |

### Technical Data

**Time Circuit**

| | | |
|---|---|---|
| **Time ranges:** | 0.05 ... 1 s | 3 ... 60 s |
| | 0.15 ... 3 s | 5 ... 100 s |
| | 0.5 ... 10 s | 15 ... 300 s |
| | 1.5 ... 30 s | 30 ... 600 s |
| **Time setting:** | infinitely, on absolute scale remote setting via external potentiometer | |
| **Repeat accuracy:** | < ± 1 % | |
| **Min. setting time:** | 80 ms | |
| **Voltage influence:** | < ± 1.5 % | |
| **Temperature influence:** | < 0.1 % / K | |

**Input**

| | |
|---|---|
| **Nominal voltage $U_N$:** | AC/DC 24, 42 V with polarity protection<br>AC 110 ... 127, 230, 240 V |
| **Voltage range:** | 0.8 ... 1.1 $U_N$ |
| **Permissible residual current:** | 10 mA |
| **Nominal consumption:** | AC 230 V / 9 VA |
| **Nominal frequency:** | 50 / 60 Hz |

**Output**

| | | |
|---|---|---|
| **Contacts** | | |
| MK 9961.81: | 1 changeover contact, delayed | |
| MK 9961.35: | 1 NO contact, instantaneous<br>1 changeover contact, delayed | |
| **Thermal current $I_{th}$** | | |
| MK 9961.81: | 5 A | |
| MK 9961.35: | 2 A | |
| **Switching capacity** | | |
| to AC 15 | | |
| NO contact: | 3 A / AC 230 V | IEC/EN 60 947-5-1 |
| NC contact: | 1 A / AC 230 V | IEC/EN 60 947-5-1 |
| **Electrical life** | | IEC/EN 60 947-5-1 |
| to AC 15 at 3 A, AC 230 V | | |
| MK 9961.81: | 5 x $10^5$ switching cycles | |
| MK 9961.35: | 3 x $10^5$ switching cycles | |
| **Permissible switching frequency:** | 3 000 switching cycles / h | |
| **Short circuit strength max. fuse rating:** | 4 A gL | IEC/EN 60 947-5-1 |
| **Mechanical life:** | 50 x $10^6$ switching cycles | |

## Technical Data

### General Data

| | | |
|---|---|---|
| **Operating mode:** | Continuous operation | |
| **Temperature range:** | - 20 ... + 60 °C | |
| **Clearance and creepage distances** | | |
| rated impulse voltage / pollution degree: | 4 kV / 2 | IEC 60 664-1 |
| **EMC** | | |
| Electrostatic discharge: | 8 kV (air) | IEC/EN 61 000-4-2 |
| HF irradiation: | 10 V/m | IEC/EN 61 000-4-3 |
| Fast transients: | 2 kV | IEC/EN 61 000-4-4 |
| Surge voltages between wires for power supply: | 2 kV | IEC/EN 61 000-4-5 |
| between wire and ground: | 4 kV | IEC/EN 61 000-4-5 |
| Interference suppression: | Limit value class B | EN 55 011 |
| **Degree of protection** | | |
| Housing: | IP 40 | IEC/EN 60 529 |
| Terminals: | IP 20 | IEC/EN 60 529 |
| **Housing:** | Thermoplast with V0 behaviour according to UL subj. 94 | |
| **Vibration resistance:** | Amplitude 0.35 mm frequenzy 10 ... 55 Hz | IEC/EN 60 068-2-6 |
| **Climate resistance:** | 20 / 060 / 04 | IEC/EN 60 068-1 |
| **Terminal designation:** | EN 50 005 | |
| **Wire connection:** | 2 x 1.5 mm² solid or 2 x 1.0 mm² stranded wire with sleeve DIN 46 228-1/-2/-3/-4 | |
| **Wire fixing:** | Flat terminals with self-lifting clamping piece | IEC/EN 60 999-1 |
| **Mounting:** | DIN rail | IEC/EN 60 715 |
| **Weight:** | 140 g | |

### Dimensions

**Width x height x depth:** 22.5 x 82 x 99 mm

## Standard Type

MK 9961.81 AC 230 V 50/60 Hz 10 s

| | | |
|---|---|---|
| Article number: | 0021491 | stock item |
| • Output: | 1 changeover contact | |
| • Nominal voltage $U_N$: | AC 230 V | |
| • Time range: | 0.5 ... 10 s | |
| • Width: | 22.5 mm | |

## Variant

MK 9961/61: with UL-approval

### Ordering example of variant

MK 9961 .81 /_ _ AC 230 V 50/60 Hz 100 s

- 100 s — Time range, end value
- 50/60 Hz — Nominal frequency
- AC 230 V — Nominal voltage
- /_ _ — Variant, if required
- .81 — Contacts
- MK 9961 — Type

## Accessories

AD 3: External potentiometer

| | | | |
|---|---|---|---|
| 1 | MΩ | at time range | 1 s |
| 1 | MΩ | at time range | 3 s |
| 1 | MΩ | at time range | 10 s |
| 4.7 | MΩ | at time range | 30 s |
| 10 | MΩ | at time range | 60 s |
| 10 | MΩ | at time range | 100 s |
| 20 | MΩ | at time range | 300 s |
| 20 | MΩ | at time range | 600 s |

Degree of protection front side: IP 60

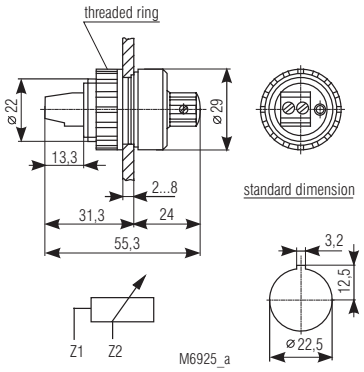

# MINITIMER
## Timer, Release Delay
## MK 9962N

- According to IEC/EN 61 812-1
- Release delay, with control signal
- 8 time ranges from 0.05 s to 300 h selectable via rotational switch
- Voltage range AC/DC 12 ... 240 V for auxiliary supply and control input
- Adjustment aid for quick setting of long time values
- With input for interruption of timing
- LED indicators for operation, contact position and time delay
- 2 changeover contacts
- With remote potentiometer facility as option
- Wire connection: also 2 x 1.5 mm² stranded ferruled, or 2 x 2.5 mm² solid DIN 46 228-1/-2/-3/-4
- As option with pluggable terminal blocks for easy exchange of devices
  - with screw terminals
  - or with cage clamp terminals
- 22.5 mm width

### Function Diagram

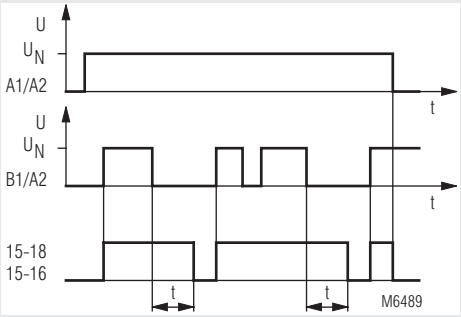


### Approvals and Markings

CE | c UL us LISTED * Canada / USA

* see variants

### Applications

Time-dependent controllers

### Circuit Diagrams

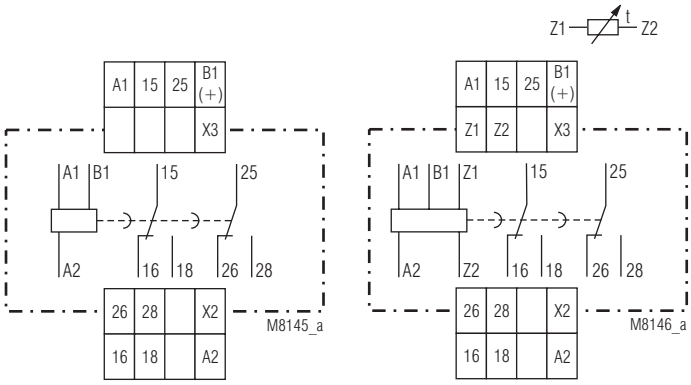


MK 9962N.82

MK 9962N.82/300

### Connection Terminals

| Terminal designation | Signal description |
|---|---|
| A1 | L / + |
| A2 | N / - |
| 15, 16, 18 | Changeover contact |
| 25, 26, 28 | Changeover contact |
| B1(+) | Control Input (start time delay) |
| X2, X3 | Control Input (time interruption with time adding) |
| Z1, Z2 | Input to connect a remote potentiometer for time setting t1 |

### Indicators

| | |
|---|---|
| green LED: | on when auxiliary voltage connected |
| yellow LED "R/t": | shows status of output relay and time delay: |
| - LED off | output relay not active; no time delay |
| - LED continuously on | output relay active; no time delay (≙ B1 input active) |
| - LED flashing (long on, short off) | output relay active; time delay |

### Notes

**Adjustment assistance**

The flashing period of the yellow LED is 1 s ± 4% and can be used to adjust the time. Especially on the lower end of scale and for long times it is suitable as the multiplication factors between the different time ranges are exact without tolerance.

Example:

The required time is 40 min. It has to be adjusted within the range 3 ... 300 min. The time check takes too long as several timing cycles would be necessary for a precise value.

For faster adjustment the setting is made to 0.03 ... 3 min. On this range the potentiometer should be set to 0.4 min (= 24 sec). With the right potentiometer setting the LED must show 24 flashing cycles. After that the time range is switched over to 3 ... 300 min and the setting is complete.

## Notes

**Remote potentiometer**
With the variant MK 9962N.82/300 the time setting can also be made via remote potentiometer of 10 kOhms. It is connected to the terminals Z1-Z2. The corresponding potentiometer on the relay has to be set to min. If no remote potentiometer is required the terminals Z1-Z2 have to be linked.
The wires to the remote potentiometers should be installed separately from the lines with mains voltage. If this is not possible, a screened cable is recommendet where the shield is connected to Z2.
To terminals Z1 and Z2 no external voltage must be connected, as the unit might be damaged.

**Control input B1**
The unit needs a continuously connected auxiliary supply on A1-A2. The timing is controlled via input B1. The control unit B1 (+ with DC) has to be supplied with voltage against A2. The control signal could be the same as the auxiliary/control voltage of A1 or any other voltage between 12 and 240 V AC or DC. Operating a parallel load (e.g. a contactor) between B1 and A2 is also allowed.

**Time interruption and time addition with X2 - X3**
The time delay can be interrupted during timing by bridging the terminals X2 - X3. By opening the bridge the time continues (time addition).
While X2 and X3 are bridged the control input is disabled and the yellow LED remains in the state it had at stop. No external voltage must be connected to X2 and X3 as the unit may be damaged.

## Setting

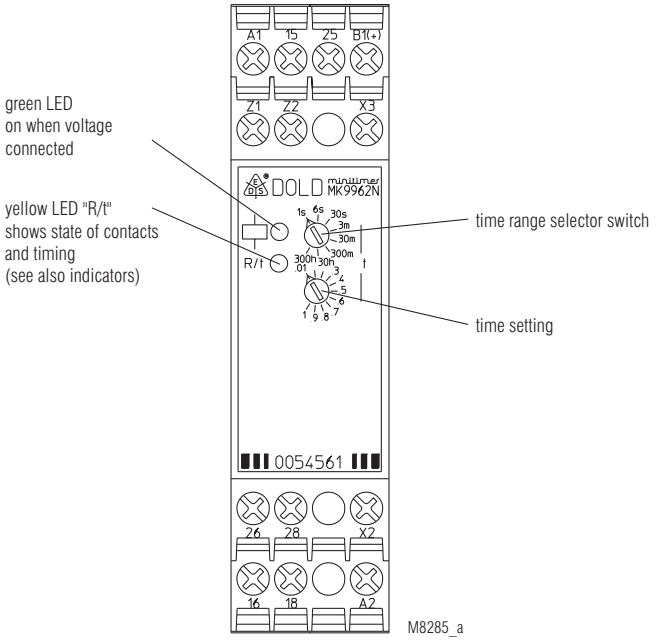


## Technical Data

**Time circuit**

| | |
|---|---|
| **Time ranges:** | 8 time ranges settable via rotational switch: |
| | 0.05 ... 1 s  0.3 ... 30 min |
| | 0.06 ... 6 s  3 ... 300 min |
| | 0.3 ... 30 s  0.3 ... 30 h |
| | 0.03 ... 3 min  3 ... 300 h |
| **Time setting:** | continuous, 1:100 on relative scale |
| **Minimum on time (B1):** | |
| AC 50 Hz: | approx. 15 ms |
| DC: | approx. 5 ms |
| **Repeat accuracy:** | ± 0.5 % of selected end of scale value + 20 ms |
| **Voltage and temperature influence:** | ≤ 1 % with the complete operating range |

**Input**

| | |
|---|---|
| **Auxiliary voltage $U_H$:** | AC/DC 12 ... 240 V |
| **Voltage range:** | 0.8 ... 1.1 $U_N$ |
| **Frequency range (AC):** | 45 ... 400 Hz |
| **Nominal consumption** | |
| at AC 12 V: | approx. 1.5 VA |
| at AC 24 V: | approx. 2 VA |
| at AC 240 V: | approx. 3 VA |
| at DC 12 V: | approx. 1 W |
| at DC 24 V: | approx. 1 W |
| at DC 240 V: | approx. 1 W |
| **Release voltage (A1/A2)** | |
| AC 50 Hz: | approx. 7.5 V |
| DC: | approx. 7 V |
| **Control voltage (B1/A2):** | AC/DC 12 ... 240 V |
| **Voltage range (B1/A2):** | 0.8 ... 1.1 $U_N$ |
| **Control current (B1)**: | approx. 1 mA, over complete voltage range |
| **Release voltage (B1/A2)** | |
| AC 50 Hz: | approx. 3.5 V |
| DC: | approx. 3 V |

**Output**

| | | |
|---|---|---|
| **Contacts** | | |
| MK 9962N.82: | 2 changeover contacts | |
| **Contact material:** | AgNi | |
| **Measured nominal voltage:** | AC 250 V | |
| **Thermal current $I_{th}$:** | see quadratic total current limit curve (max. 4 A per contact) | |
| **Switching capacity** | | |
| to AC 15 | | |
| NO contact: | 3 A / AC 230 V | IEC/EN 60 947-5-1 |
| NC contact: | 1 A / AC 230 V | IEC/EN 60 947-5-1 |
| to DC 13: | 1 A / DC 24 V | |
| **Electrical life** | | IEC/EN 60 947-5-1 |
| to AC 15 at 1 A, AC 230 V: | 1.5 x $10^5$ switching cycles | |
| **Permissible switching frequency:** | 6 000 switching cycles / h | |
| **Short circuit strength max. fuse rating:** | 4 A gG / gL | IEC/EN 60 947-5-1 |
| **Mechanical life:** | ≥ 30 x $10^6$ switching cycles | |

## Technical Data

### General Data

| | | |
|---|---|---|
| **Operating mode:** | Continuous operation | |
| **Temperature range** | | |
| Operation: | - 40 ... + 60 °C (higher temperature see quadratic total current limit curve) | |
| Storage: | - 40 ... + 70 °C | |
| **Relative air humidity:** | 93 % at 40 °C | |
| **Altitude:** | < 2,000 m | |
| **Clearance and creepage distances** | | |
| rated impulse voltage / pollution degree: | | |
| Input / Output: | 4 kV / 2 (basis insulation) | IEC 60 664-1 |
| Output / Output: | 4 kV / 2 (basis insulation) | IEC 60 664-1 |
| Overvoltage category: | III | |
| Insulation test voltage, type test: | 2.5 kV; 1 min | |
| **EMC** | | |
| Electrostatic discharge: | 8 kV (air) | IEC/EN 61 000-4-2 |
| HF irradiation | | |
| 80 MHz ... 1 GHz: | 20 V / m | IEC/EN 61 000-4-3 |
| 1 GHz ... 2.7 GHz: | 10 V / m | IEC/EN 61 000-4-3 |
| Fast transients: | 2 kV | IEC/EN 61 000-4-4 |
| Surge voltages between | | |
| wires for power supply: | 2 kV | IEC/EN 61 000-4-5 |
| between wire and ground: | 4 kV | IEC/EN 61 000-4-5 |
| HF-wire guided: | 10 V | IEC/EN 61 000-4-6 |
| Interference suppression: | Limit value class A*) *) The device is designed for the usage under industrial conditions (Class A, EN 55011). When connected to a low voltage public system (Class B, EN 55011) radio interference can be generated. To avoid this, appropriate measures have to be taken. | |
| **Degree of protection** | | |
| Housing: | IP 40 | IEC/EN 60 529 |
| Terminals: | IP 20 | IEC/EN 60 529 |
| **Housing:** | Thermoplastic with V0 behaviour according to UL subject 94 | |
| **Vibration resistance:** | Amplitude 0.35 mm, frequency 10 ... 55 Hz, | IEC/EN 60 068-2-6 |
| **Climate resistance:** | 20 / 060 / 04 | IEC/EN 60 068-1 |
| **Terminal designation:** | | EN 50 005 |
| **Wire connection** | | DIN 46 228-1/-2/-3/-4 |
| **Screw terminals (integrated):** | 1 x 4 mm² solid or<br>1 x 2.5 mm² stranded ferruled or<br>2 x 1.5 mm² stranded ferruled or<br>2 x 2.5 mm² solid | |
| Insulation of wires or sleeve length: | 8 mm | |
| **Plug in with screw terminals** | | |
| max. cross section for connection: | 1 x 2.5 mm² solid or<br>1 x 2.5 mm² stranded ferruled | |
| Insulation of wires or sleeve length: | 8 mm | |
| **Plug in with cage clamp terminals** | | |
| max. cross section for connection: | 1 x 4 mm² solid or<br>1 x 2.5 mm² stranded ferruled | |
| min. cross section for connection: | 0.5 mm² | |
| Insulation of wires or sleeve length: | 12 $^{\pm 0.5}$ mm | |
| **Wire fixing:** | Plus-minus terminal screws M 3.5 box terminals with wire protection or cage clamp terminals | |
| **Fixing torque:** | max. 0.8 Nm | |
| **Mounting:** | DIN rail | IEC/EN 60 715 |
| **Weight:** | 150 g | |

## Technical Data

### Dimensions

| | |
|---|---|
| **Width x heigth x depth** | |
| MK 9962N: | 22.5 x 90 x 97 mm |
| MK 9962N PC: | 22.5 x 111 x 97 mm |
| MK 9962N PS: | 22.5 x 104 x 97 mm |

## UL-Data

| | |
|---|---|
| **Switching capacity:** | |
| Ambient temperature 60°C: | Pilot duty B300<br>5A 250Vac G.P. |
| **Wire connection:** | 60°C / 75°C copper conductors only |
| Screw terminals fixed: | AWG 20 - 12 Sol/Str Torque 0.8 Nm |
| Plug in screw: | AWG 20 - 14 Sol Torque 0.8 Nm<br>AWG 20 - 16 Str Torque 0.8 Nm |
| Plug in cage clamp: | AWG 20 - 12 Sol/Str |

**Technical data that is not stated in the UL-Data, can be found in the technical data section.**

## Standard Type

MK 9962N.82/61 AC/DC 12 ... 240 V 0.05 ... 300 h

| | |
|---|---|
| Article number: | 0054105 |
| • Output: | 2 changeover contacts |
| • Auxiliary voltage $U_H$: | AC/DC 12 ... 240 V |
| • Time ranges: | 0.05 ... 300 h |
| • Width: | 22.5 mm |

## Variants

| | |
|---|---|
| MK 9962N.82/300/61: | Connection facility for a remote potentiometer 10 kΩ to adjust the time |

### Ordering example for variants

MK 9962N .82 _ _ / _ _ _ /61 AC/DC 12 ... 240 V 0.05 s ... 300 h

- 0.05 s ... 300 h: Time range
- AC/DC 12 ... 240 V: Auxiliary voltage
- /61: with UL-approval
- _ _ _: Variant,if required
- _ _ /: Type of terminals
  - without indication: terminal blocks fixed, with screw terminals
  - PC (plug in cage clamp): pluggable terminal blocks with cage clamp terminals
  - PS (plug in screw): pluggable terminal blocks with screw terminals
- .82: Contacts
- MK 9962N: Type

## Options with Pluggable Terminal Blocks

Screw terminal
(PS/plugin screw)

Cage clamp
(PC/plugin cage clamp)

## Notes

Removing the terminal blocks with cage clamp terminals

1. The unit has to be disconnected.
2. Insert a screwdriver in the side recess of the front plate.
3. Turn the screwdriver to the right and left.
4. Please note that the terminal blocks have to be mounted on the belonging plug in terminations.

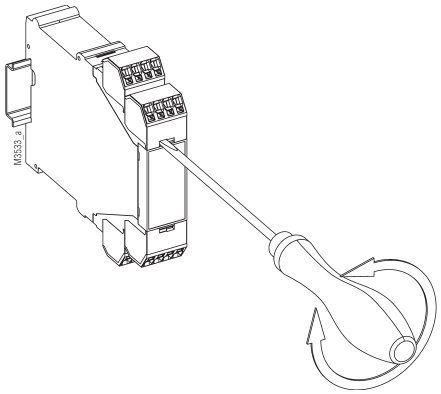


## Accessories

AD 3: External potentiometer 10 kΩ
Article number: 0028962

The external potentiometer is used for remote setting of the time delay. The internal potentiometer of the timer must be set to min. time delay.

Degree of protection front side: IP 60

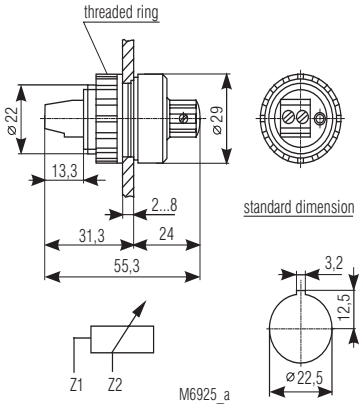


## Characteristics

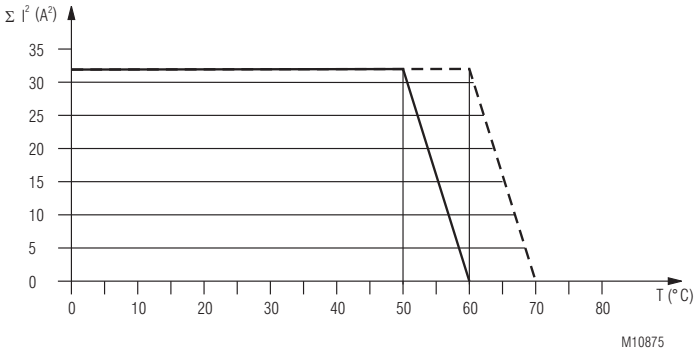


Quadratic total current limit curve

## Connection Examples

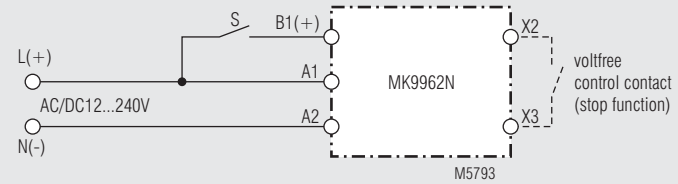


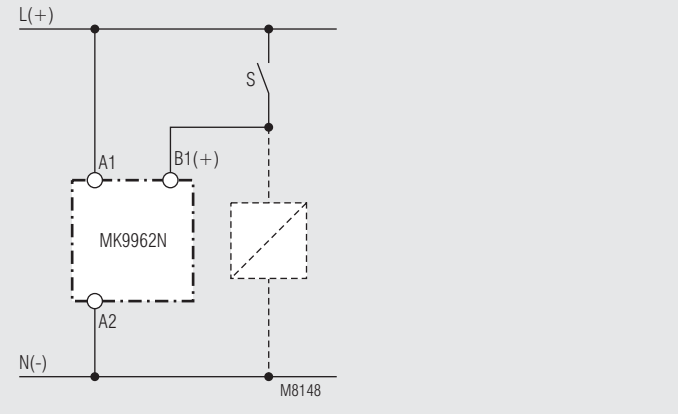


Control with parallel connected load

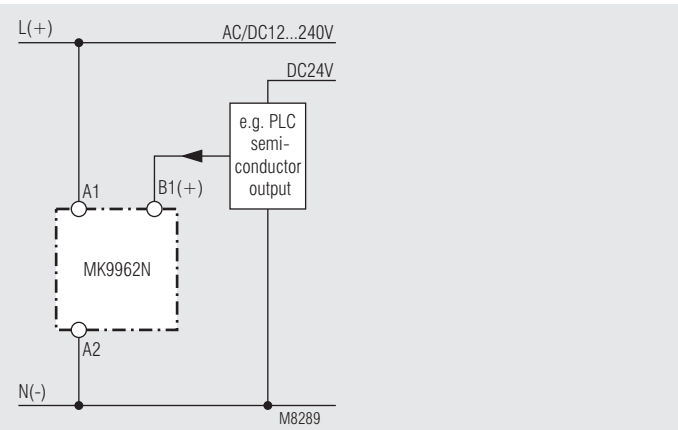


Connection with 2 different control voltages

# MINITIMER
## Timer, Release Delay
## AA 7562

**Your Advantage**
- Non sensitive to electromagnetical influence by pneumatic time element

**Features**
- According to IEC/EN 60 812-1
- Delay up to 180 s
- Repeat accuracy < ± 5 %
- 1 changeover contact delayed, 1 changeover contact without delay
- Width 45 mm

### Function Diagram

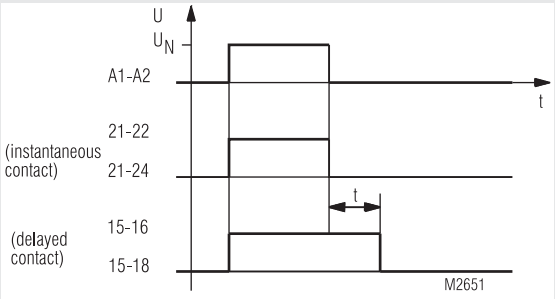


### Approvals and Markings

CE

### Application

Time dependent controls

### Function

With the release delayed timer AA 7562 the delay is achieved by a pair of bellows that is compressed by a magnet system. With an adjustable regulating system the time for the expansion of the bellows is defined. The bellow then operates the switch contacts.

### Notes

The mounting distance should not be smaller than 8 mm.

### Circuit Diagram

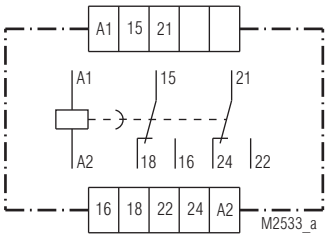


AA 7562.32

### Connection Terminals

| Terminal designation | Signal description |
|---|---|
| A1 | L / + |
| A2 | N / - |
| 15, 16, 18 | Changeover contacts delayed |
| 21, 22, 24 | Changeover contacts not delayed |

## Technical Data

### Time Circuit

| | | |
|---|---|---|
| **Time ranges:** | 0.2 ... 30 s | 0.2 ... 180 s |
| **Time setting:** | infinitely | |
| **Repeat accuracy:** | ≤ ± 5 % of the final range value | |
| **Min. transition time:** | 25 ms | |
| **Temperature influence:** | 0.5 % / K<br>under certain circumstances, variation and temperature errors can be added. | |

### Input

| | | |
|---|---|---|
| **Nominal voltage $U_N$:** | AC 24, 42, 110, 127, 230, 240 V<br>50 or 60 Hz<br>DC 12, 24, 42, 48, 110, 220 V | |
| **Voltage range:** | AC 0.85 ... 1.1 $U_N$<br>DC 0.8 ... 1.1 $U_N$ | |
| **Nominal consumption:** | Initial position | Active position |
| | 22 VA | 7 VA |
| | 5.5 W | 5.5 W |
| **Nominal frequency:** | 50 Hz | |

### Output

**Contacts**

| | | |
|---|---|---|
| AA 7562.32: | 1 changeover contact, without delay<br>1 changeover contact, delayed | |
| **Contact material:** | Ag | |
| **Measured nominal voltage:** | AC 250 V | |
| **Operating time of contacts:** | < 50 ms | |
| **Release time of contacts:** | < 25 ms | |
| **Thermal current $I_{th}$:** | 4 A | |
| **Nominal breaking capacity** | AC 110 V | AC 230 V |
| cos φ 1 ... 0.7: | 2 A | 2 A |
| cos φ 0.4: | 1 A | 1 A |
| | DC 110 V | DC 220 V |
| ohmic: | 0.25 A | 0.25 A |
| inductive: | 0.03 A | 0.02 A |
| **Electrical life:** | 1.2 x $10^6$ switching cycles<br>1 500 switches/h<br>at 30 % of the switching capacity<br>0.8 x $10^6$ switching cycles<br>1 000 switches/h<br>at 50 % of the switching capacity<br>0.3 x $10^6$ switching cycles<br>500 switches/h<br>at 100 % of the switching capacity | |
| **Permissible switching frequency:** | 1 500 switching cycles / h | |
| **Short circuit strength max. fuse rating:** | 2 A gG / gL | IEC/EN 60 947-5-1 |
| **Mechanical life:** | > 3 x $10^6$ switching cycles | |

### General Data

| | | |
|---|---|---|
| **Operating mode:** | Continuous operation | |
| **Temperature range** | | |
| Operation: | - 10 ... + 55 °C | |
| Storage: | - 10 ... + 55 °C | |
| **Altitude:** | < 2,000 m | |
| **Clearance and creepage distances** | | |
| rated impulse voltage / pollution degree: | 4 kV / 2 | IEC 60 664-1 |
| **EMC** | | |
| Electrostatic discharge: | 8 kV (air) | IEC/EN 61 000-4-2 |
| HF-irradiation: | 10 V/m | IEC/EN 61 000-4-3 |
| Fast transients: | 2 kV | IEC/EN 61 000-4-4 |
| Surge voltages between | | |
| wires for power supply: | 1 kV | IEC/EN 61 000-4-5 |
| between wire and ground: | 2 kV | IEC/EN 61 000-4-5 |
| HF-wire guided: | 10 V | IEC/EN 61 000-4-6 |
| Interference suppression: | Limit value class B | EN 55 011 |

## Technical Data

### Degree of protection

| | | |
|---|---|---|
| Housing: | IP 40 | IEC/EN 60 529 |
| Terminals: | IP 10 | IEC/EN 60 529 |
| **Housing:** | Thermoplast with V0-behaviour according to UL subject 94 | |
| **Vibration resistance:** | Amplitude 0.35 mm<br>frequency 10...55Hz,IEC/EN 60 068-2-6 | |
| **Climate resistance:** | The device is only to be used in dry rooms, in closed switch cabinets or switch boxes | |
| **Terminal arrangement:** | DIN 46 199-5 | |
| **Terminal designation:** | EN 50 005 | |
| **Wire connection:** | 2 x 2.5 $mm^2$ solid or<br>2 x 1.5 $mm^2$ stranded wire with sleeve<br>DIN 46 228-1/-2/-3/-4 | |
| **Wire fixing:** | Flat terminals with self-lifting clamping piece | IEC/EN 60 999-1 |
| **Fixing torque:** | 0.8 Nm | |
| **Mounting:** | DIN rail | IEC/EN 60 715 |
| **Weight:** | 270 g AC-version<br>310 g DC-version | |

### Dimensions

| | |
|---|---|
| **Widht x height x depth:** | 45 x 77 x 124 mm |

### Standard Type

AA 7562.32 AC 230 V 50 Hz 0.2 ... 30 s

| | |
|---|---|
| Article number: | 0009431 |
| • Output: | 1 changeover contact, instantaneous<br>1 changeover contact, delayed |
| • Nominal voltage $U_N$: | AC 230 V |
| • Time range: | 0.2 ... 30 s |
| • Width: | 45 mm |

### Variant

| | |
|---|---|
| AA 7562.32/001: | DC-version, as option for:<br>DC 12, 24, 42, 48, 110, 220 V |

### Ordering example for variant

AA 7562 .32 /001 DC 24 V 180 s

- 180 s — Time range
- DC 24 V — Nominal voltage
- /001 — Variant, if required
- .32 — Contacts
- AA 7562 — Type

# MINITIMER
## Timer, Release Delay
## AA 7666, EC 7666, EF 7666, EH 7666

0227770

AA 7666

EC 7666

EF 7666

EH 7666

- According to IEC/EN 61 812-1
- Delay up to 60 h
- 6 time ranges on one unit, adjustable at front side
- Repeat accuracy ≤ ± 0.5 %
  (≤ ± 1 % for the range 3 and 6 s)
- Time lapse display
- Switching position display (except for EH 7666)
- With instantaneous contact
- No voltage safe
- EF 7666: front side protected against beam water, IP 65
- AA 7666: width 45 mm
  EC 7666: front size 48 x 72 mm
  EF 7666: front size 72 x 72 mm
  EH 7666: front size 96 x 96 mm

### Approvals and Markings

CE

### Application

Time dependent controls

### Indication

| | |
|---|---|
| Time display: | via red pointer at scale of the device |
| Switching position: | red sign when NO contacts are closed (not for EH 76669 |
| Time range display: | final scale value in a window |

### Notes

The frequency changing switch 50 / 60 Hz is located on the bottom side of the unit.

### Function Diagrams

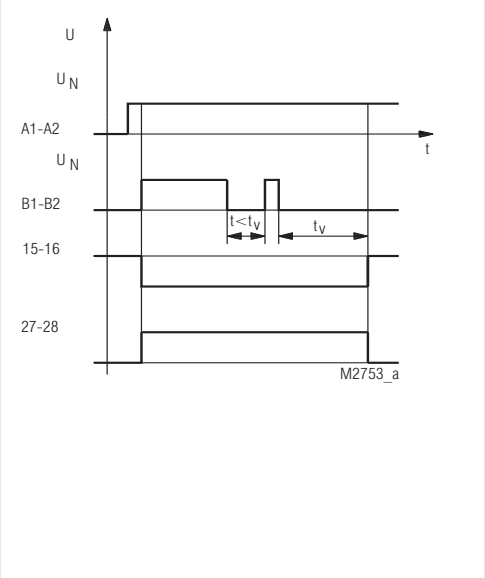


AA 7666.21, EC 7666.21, EH 7666.21

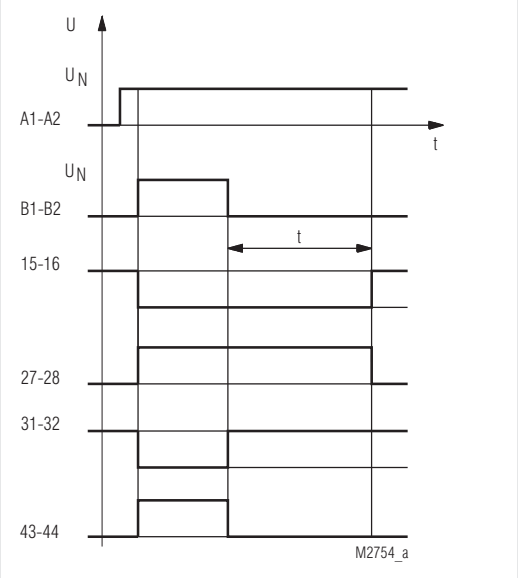


EF 7666.24

## Function Diagrams

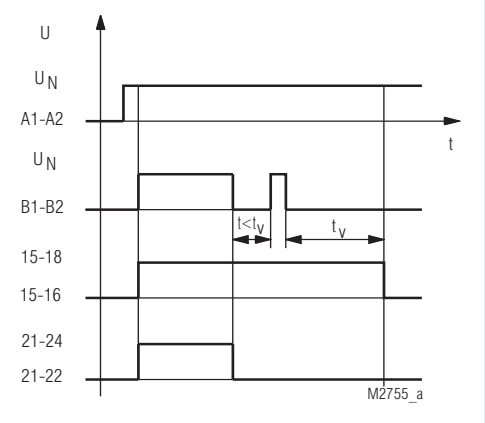


AA 7666.32, EF 7666.32

## Circuit Diagrams

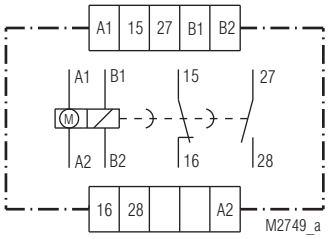


AA 7666.21

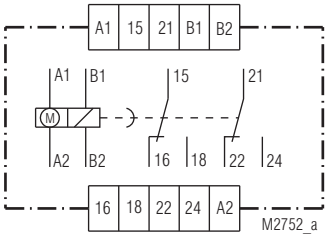


AA 7666.32

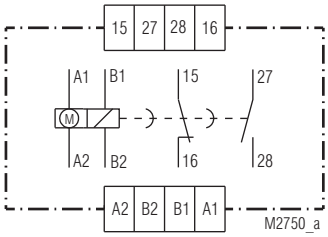


EC 7666.21

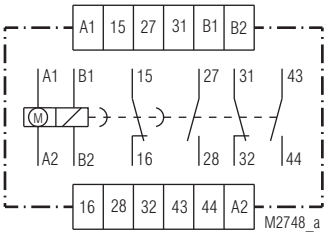


EF 7666.24

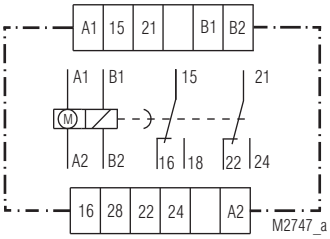


EF 7666.32

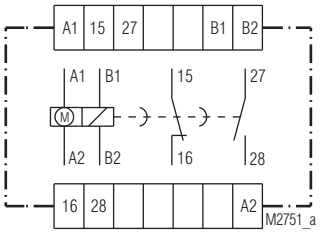


EH 7666.21

## Technical Data

### Time circuit

| | |
|---|---|
| **Time ranges:** | 6-range models<br>0.15 ... 3 s 1.5 ... 30 s 15 ... 300 s<br>0.4 ... 10 s 4 ... 100 s 40 ...1000 s<br>or<br>0.15 ... 3 s 0.15 ... 3 min 0.15 ... 3 h<br>1.5 ...30 s 1.5 ...30 min 1.5 ... 30 h<br>or<br>0.2 ... 6 s 0.2 ... 6 min 0.2 ... 6 h<br>2 ...60 s 2 ...60 min 2 ... 60 h |
| **Time setting:** | infinite with black (white) setting pointer on absolute scale |
| **Recovery time:** | < 150 ms |
| **Repeat accuracy:** | ≤ ± 0.5 % of max. scale value (at 3 and 6 s ≤ ± 1 %) |
| EH 7666, DC-version: | ≤ ± 3 % of the max. scale value |

## Technical Data

### Input

| | |
|---|---|
| **Nominal voltage $U_N$:** | AC 24, 42, 110, 127, 230, 240 V |
| **Special voltages** | |
| AA 7666: | AC 12, 400, 415 V |
| EH 7666: | DC 12, 24, 48, 60*, 110*, 230* V<br>* with external series resistance |
| **Voltage range:** | 0.8 ... 1.1 $U_N$ |
| **Nominal consumption:** | AC 7 VA<br>DC 12 V 5 W<br>DC 24 V 5 W<br>DC 48 V 7 W<br>DC 60 V 10 W<br>DC 110 V 13 W<br>DC 230 V 18 W |
| **Nominal frequency:** | 50 / 60 Hz to e selected |
| **Frequency range:** | ± 5 % $f_N$ |
| **Frequency influence:** | reverse proportional |

### Output

| | | |
|---|---|---|
| **Contacts** | | |
| AA 7666.21,<br>EC 7666.21,<br>EF 7666.21,<br>EH 7666.21: | 1 NC contact, delayed<br>1 NO contact, delayed | |
| EF 7666.24: | 1 NO contact, instantaneous<br>1 NC contact, instantaneous<br>1 NC contact, delayed<br>1 NO contact, delayed | |
| EF 7666.32: | 1 changeover contact, delayed<br>1 changeover contact, instantaneous | |
| **Operate time of contacts:** | < 35 ms | |
| **Release time:** | < 60 ms | |
| **Thermal current $I_{th}$:** | 4 A | |
| **Switching capacity** | | |
| to AC 15: | 3 A / AC 230 V | IEC/EN 60 947-5-1 |
| **Electrical life** | | IEC/EN 60 947-5-1 |
| to AC 15 at 3 A, AC 230 V: | 1 x $10^5$ switching cycles | |
| to AC 15 at 1 A, AC 230 V: | 5 x $10^5$ switching cycles | |
| **Permissible switching frequency:** | 3 000 switching cycles / h | |
| **Short circuit strength max. fuse rating:** | 10 A gL | IEC/EN 60 947-5-1 |
| **Mechanical life:** | > 30 x $10^6$ switching cycles or<br>> 15 000 h | |

### General Data

| | | |
|---|---|---|
| **Operating mode:** | Continuous operation | |
| **Temperature range:** | - 20 ... + 55 °C | |
| **Clearance and creepage distances** | | |
| rated impulse voltage / pollution degree | | |
| inputs: | 4 kV / 2 | IEC 60 664-1 |
| in-/output: | 4 kV / 2 | IEC 60 664-1 |
| **EMC** | | |
| Electrostatic discharge: | 8 kV (air) | IEC/EN 61 000-4-2 |
| HF irradiation: | 10 V/m | IEC/EN 61 000-4-3 |
| Fast transients: | 4 kV | IEC/EN 61 000-4-4 |
| Surge voltages between | | |
| wires for power supply: | 2 kV | IEC/EN 61 000-4-5 |
| between wire and ground: | 4 kV | IEC/EN 61 000-4-5 |
| HF-wire guided: | 10 V | IEC/EN 61 000-4-6 |
| Interference suppression: | Limit value class B | EN 55 011 |
| **Degree of protection:** | | IEC/EN 60 529 |
| AA 7666: | Housing: IP 40<br>Terminals: IP 20 | |
| EC 7666, EH 7666: | Housing-front: IP 40<br>Housing: IP 30<br>Terminals: IP 10 | |
| EF 7666: | Housing-front: IP 65 | |
| **Housing:** | Thermoplast with V0 behaviour according to UL subject 94 | |
| **Vibration resistance:** | Amplitude 0.35 mm<br>frequency 10...55Hz, | IEC/EN 60 068-2-6 |

## Technical Data

| | | |
|---|---|---|
| **Climate resistance:** | 20 / 055 / 04; A/B/C | IEC/EN 60 068-1 |
| **Terminal arrangement:** | DIN 46 199-5 | |
| **Terminal designation:** | EN 50 005 | |
| **Wire connection:** | 2 x 2.5 $mm^2$ solid or<br>2 x 1.5 $mm^2$ stranded wire with sleeve<br>DIN 46 228-1/-2/-3/-4 | |
| **Wire fixing:** | Flat terminals with self-lifting clamping piece | IEC/EN 60 999-1 |
| **Fixing torque:** | 0.8 Nm | |
| **Mounting** | | |
| AA 7666: | DIN rail | IEC/EN 60 715 |
| EC 7666, EF 7666, EH 7666: | flush mounting | |
| **Weight** | | |
| AA 7666: | 320 g | |
| EC 7666: | 320 g | |
| EF 7666: | 400 g | |
| EH 7666: | 450 g | |

## Dimensions

| | |
|---|---|
| **Width x height x depth** | |
| AA 7666: | 45 x 77 x 127 mm |
| EC 7666: | 48 x 72 x 120 mm |
| EF 7666: | 72 x 72 x 128 mm |
| EH 7666: | 96 x 96 x 138 mm |
| **Front panel cut-out** | |
| EC 7666: | 44 x 67 mm |
| EF 7666: | 67 x 67 mm |
| EH 7666: | ø $91^{+1}$ mm |
| **Front surface** | |
| EC 7666: | 48 x 72 mm |
| EH 7666: | 72 x 72 mm |
| EH 7666: | 96 x 96 mm |

## Standard Type

AA 7666.32 AC 230 V 50/60 Hz 0.15 s ... 30 h

| | |
|---|---|
| Article number: | 0025127 |
| • Time range: | 0.15 s ... 30 h |
| • Nominal voltage $U_N$: | AC 230 V |
| • Output: | 1 changeover contact, delayed<br>1 changeover contact, instantaneous |
| • Width: | 45 mm |

## Ordering Example

AA 7666 .32 AC 230 V 50 / 60 Hz 30 h

- 30 h — Time-range max. value
- 50 / 60 Hz — Nominal frequency
- AC 230 V — Nominal voltage
- .32 — Contact
- AA 7666 — Type

## Accessories

**for EC 7666:**

| | |
|---|---|
| ZS 700.06: | Lockable cover<br>Article number: 0004057 |
| ET 7001.407.034: | Plug-in-socket for EC 7666.21<br>Article number: 0004072 |

**for EF 7666:**

| | |
|---|---|
| ZS 700.07: | Lockable cover<br>Article number: 0004058 |
| ET 7616-0-22: | Sealing ring for sealing at the front side<br>Article number: 0045909 |

# MINITIMER
## Timer, Release Delay
## BA 7954, AI 954N*

***Only for replacement**
**Replacements:**
**MK 7873N, BA 7954**

0227771

- According to IEC/EN 61 812-1
- Release delay, without control signal
- No-voltage safe
- Delay up to 300 s
- Repeat accuracy < ± 1 %
- For 2-wire proximity sensors
- 2 changeover contacts
- Width 45 mm

### Function Diagram

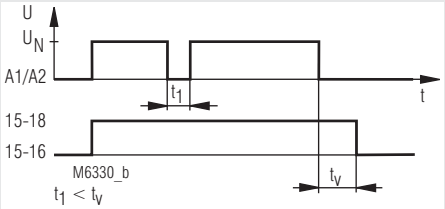


### Circuit Diagram

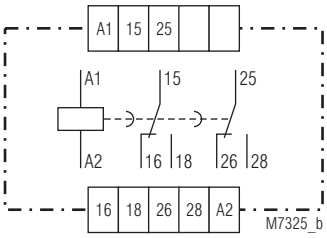


BA 7954.82, AI 954 N.0082

### Connection Terminals

| Terminal designation | Signal description |
|---|---|
| A1, A2 | Operating voltage |
| 15, 16, 18 | Changeover contacts (output relay) |
| 25, 26, 28 | Changeover contacts (2. output relay) |

### Approvals and Markings

CE

### Indication

LED: on when operating voltage applied

### Technical Data

**Time Circuit**

| | |
|---|---|
| **Time ranges:** | 0.05 ... 1 s  0.15 ... 3 s<br>0.5 ... 10 s  1.5 ... 30 s<br>5 ... 100 s  15 ... 300 s |
| **Time setting:** | stepless, on absolute scale |
| **Repeat accuracy:** | ≤ ± 1 % |
| **Min. setting time:** | 25 ms<br>**Attention!**<br>Time faults when min. setting time < 10 %. When setting time longer, the fault will be less. |
| **Voltage influence:** | < ± 1 % |
| **Temperature influence** | < 0.3 % / K |

Input

| | |
|---|---|
| **Nominal voltage $U_N$:** | AC 24, 42, 110, 127, 230, 240 V<br>DC 24 V<br><br>DC 48 V*: ZWS 20 SL 390 Ω 20 W<br>DC 60 V*: ZWS 20 SL 640 Ω 20 W<br>DC 110 V*: ZWS 20 SL 1.5 kΩ 20 W<br>DC 220 V*: ZWS 35 SL 3.3 kΩ 35 W<br>*) with external series resistor<br>The series resistors have to be used together with DC 24 V-devices. The series resistor has to be connected to (+). |
| **Voltage range:** | 0.8 ... 1.1 $U_N$ |
| **Permissible residual current:** | ≤ 2.5 mA |
| **Nominal consumption:** | AC 3 VA<br>DC 48 60 110/127 220 V<br>3.0 3.5 6.5 13.0 W |
| **Nominal frequency:** | 50 / 60 Hz |
| **Recovery time:** | ≥ 25 ms |

## Technical Data

### Output

| | | |
|---|---|---|
| **Contacts:** | | |
| BA 7954.82, AI 954 N.82: | 2 changeover contacts, delayed | |
| **Contact material:** | $AgSnO_2$ , 0,2µm Au | |
| **Measured nominal voltage:** | AC 250 V | |
| **Operate time of the contacts:** | ≤ 25 ms | |
| **Thermal current $I_{th}$:** | 5 A | |
| **Switching capacity** | | |
| to AC 15: | | |
| NO contact: | 3 A / AC 230 V | IEC/EN 60 947-5-1 |
| NC contact: | 1 A / AC 230 V | IEC/EN 60 947-5-1 |
| **Electrical life** | | IEC/EN 60 947-5-1 |
| to AC 15 at 1 A, AC 230 V: | 2.5 x $10^5$ switching cycles | |
| **Permissible switching frequency:** | 6000 switching cycles / h | |
| **Short-circuit strength** | | |
| **max. fuse rating:** | 4 A gG / gL | IEC/EN 60 947-5-1 |
| **Mechanical life:** | > 10 x $10^6$ switching cycles | |

### General Data

| | | |
|---|---|---|
| **Operating mode:** | Continuous operation | |
| **Temperature range** | | |
| Operation: | - 20 ... + 60 °C | |
| Storage: | - 20 ... + 60 °C | |
| **Altitude:** | < 2,000 m | |
| **Clearance and creepage distances** | | |
| rated impulse voltage / pollution degree: | 4 kV / 2 | IEC 60 664-1 |
| Overvoltage category: | III | |
| Insulation test voltage, type test: | 2.5 kV; 1 min | |
| **EMC** | | |
| Electrostatic discharge: | 8 kV (air) | IEC/EN 61 000-4-2 |
| HF irradiation | | |
| 80 MHz ... 1 GHz: | 10 V / m | IEC/EN 61 000-4-3 |
| 1 GHz ... 2 GHz: | 10 V / m | IEC/EN 61 000-4-3 |
| 2 GHz ... 2.7 GHz: | 10 V / m | IEC/EN 61 000-4-3 |
| Fast transients: | 2 kV | IEC/EN 61 000-4-4 |
| Surge voltages between | | |
| wires for power supply: | 1 kV | IEC/EN 61 000-4-5 |
| between wire and ground: | 2 kV | IEC/EN 61 000-4-5 |
| Interference suppression: | Limit value class B | EN 55 011 |
| **Degree of protection** | | |
| Housing: | IP 40 | IEC/EN 60 529 |
| Terminals: | IP 20 | IEC/EN 60 529 |
| **Housing:** | Thermoplast with V0 behaviour according to UL subject 94 | |
| **Vibration resistance:** | Amplitude 0.35 mm frequency 10...55Hz | IEC/EN 60 068-2-6 |
| **Climate resistance:** | 20 / 060 / 04 | IEC/EN 60 068-1 |
| **Terminal arrangement:** | DIN 46 199-5 | |
| **Terminal designation:** | EN 50 005 | |
| **Wire connection:** | 2 x 2.5 $mm^2$ solid or<br>2 x 1.5 $mm^2$ stranded wire with sleeve<br>DIN 46 228-1/-2/-3/-4 | |
| **Wire fixing:** | Flat terminals with self-lifting clamping piece | IEC/EN 60 999-1 |
| **Fixing torque:** | 0,8 Nm | |
| **Mounting:** | DIN rail | IEC/EN 60 715 |
| **Weight:** | 260 g | |

### Dimensions

| | |
|---|---|
| **Width x heigth x depth** | |
| BA 7954: | 45 x 73 x 133 mm |
| AI 954N: | 45 x 77 x 127 mm |

## Standard Type

BA 7954.82 AC 230 V 50 / 60 Hz 0.5 ... 10 s
Article number: 0024075
Nominal voltage $U_N$: AC 230 V
Time range: 0.5 ... 10 s
Width: 45 mm

## Ordering example for variant

BA 7954 .82 /_ _ _ DC 24 V 0.5 ... 10 s

- Time range
- Nominal voltage
- Variant, if required
- Contacts
- Type

## Accessories

ZWS 20 SL, ZWS 35 SL: Series resistors

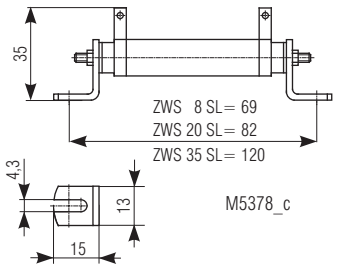


for BA 7954:
ET 4762-5 Adaptor
Article number: 0023119

for AI 954 N:
K 70-34 Transparent cover
Article number: 0011790

# MINITIMER
## Timer, Release Delay
## BA 7962, MK 9962

0227978

BA 7962

MK 9962

- According to IEC/EN 61 812-1
- Release delay, with control signal
- Time delay up to 100 h
- Repeat accuracy ≤ ± 1 %
- MK 9962 with dual voltage supply
- Control by voltage free contact
  MK 9962 optionally control by supply voltage
- 2 LED displays for control and contact position
- 2 changeover contacts
- BA 7962, AA 9962: width 45 mm
  MK 9962: width 22.5 mm

### Function Diagram

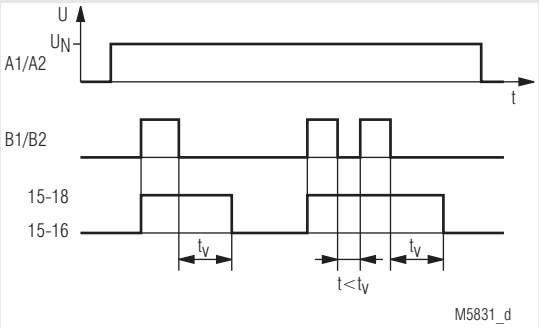


### Approvals and Markings

CE

### Applications

Time-dependent controllers

### Indication

| | |
|---|---|
| upper LED: | on when control contact closed |
| lower LED: | on when output relay energized |

### Circuit Diagrams

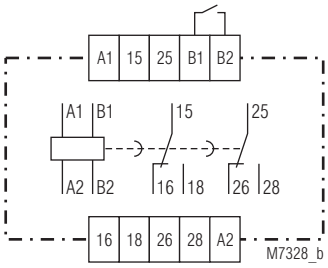


BA 7962.82

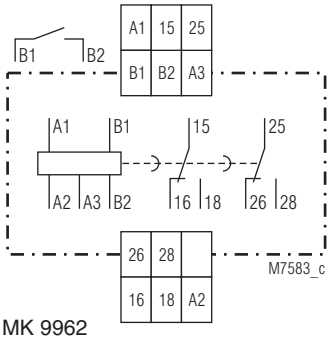


MK 9962

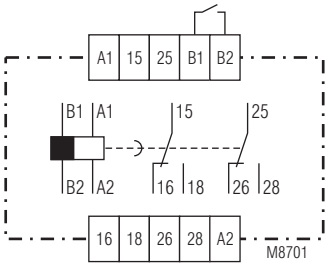


BA 7962.82/200
with forcibly guided contacts

### Connection Terminals

| Terminal designation | Signal description |
|---|---|
| A1, A2, A3 | Operation voltage |
| B1, B2 | Control input |
| 15, 16, 18 | Changeover contacts (output relay) |
| 25, 26, 28 | Changeover contacts (2nd output relay) |

## Technical Data

### Time Circuit

**Time ranges:**

| | | |
|---|---|---|
| 0.05 ... 1 s | 0.5 ... 10 min. | 0.15 ... 3 h |
| 0.15 ... 3 s | 1.5 ... 30 min. | 0.5 ... 10 h |
| 0.5 ... 10 s | 3 ... 60 min. | 1.5 ... 30 h |
| 1.5 ... 30 s | | 5 ... 100 h |
| 5 ... 100 s | | |
| 15 ... 300 s | | |

| | |
|---|---|
| **Time setting:** | stepless on absolute scale |
| **Min. switch-on time:** | 20 ms |
| **Repeat accuracy:** | ≤ ± 1 % of set value |
| **Voltage influence:** | ≤ ± 0.5 % |
| **Temperature influence:** | < ± 0.1 % / K |

### Input

**Nominal voltage $U_N$:**

| | |
|---|---|
| BA 7962: | AC 24, 42, 110, 127, 230, 240 V |
| | DC 24, 48, 60, 110, 220, 240 V |
| MK 9962: | AC/DC 24 V[1)] + AC 110 ... 127 V[2)] |
| | AC/DC 24 V[1)] + AC 220 ... 240 V[2)] |
| | AC/DC 24 V[1)] + AC/DC 42 V[2)] |
| | [1)] at terminals A3 - A2 |
| | [2)] at terminals A1 - A2 |
| **Voltage range:** | 0.8 ... 1.1 $U_N$ at AC |

**Nominal power consumption:**

| | | |
|---|---|---|
| BA 7962: | AC 3.5 VA | |
| | DC 24 V | 1 W |
| | DC 48 V | 2 W |
| | DC 60 V | 2 W |
| | DC 110 V | 2 W |
| | DC 220 V | 3 W |
| | DC 240 V | 3 W |
| MK 9962: | AC 24 V | 0.8 VA |
| | AC 42 V | 1.8 VA |
| | AC 110 V | 3.5 VA |
| | AC 230 V | 7 VA |
| | AC 240 V | 8 VA |
| | DC 24 V | 0.8 W |
| | DC 42 V | 1.8 W |

| | |
|---|---|
| **Nominal frequency:** | 50 / 60 Hz |
| **Frequency range** | ± 5 % $f_N$ |

### Output

| | | |
|---|---|---|
| **Contacts:** | 2 delayed changeover contacts | |
| **Contact material:** | AgNi 0.2µ, gold plated | |
| **Measured nominal voltage:** | AC 250 V | |
| **Thermal current $I_{th}$:** | 5 A | |
| **Switching capacity** | | |
| to AC 15 | | |
| NC contact: | 1 A / AC 230 V | IEC/EN 60 947-5-1 |
| NO contact: | 3 A / AC 230 V | IEC/EN 60 947-5-1 |
| **Electrical life** | | IEC/EN 60 947-5-1 |
| to AC 15 at 3 A, AC 230 V: | | |
| BA 7962.82: | 0.5 x $10^5$ switching cycles | |
| MK 9962: | 5 x $10^5$ switching cycles | |
| **Permissible operating frequency:** | 6 000 switching cycles / h | |
| **Short circuit strength max. fuse rating:** | 6 A gL | IEC/EN 60 947-5-1 |
| **Mechanical life:** | 30 x $10^6$ switching cycles | |

### General Data

| | | |
|---|---|---|
| **Operating mode:** | Continuous operation | |
| **Temperature range** | | |
| Operation, Storage | | |
| BA 7962 (AC), MK 9962: | - 20 ... + 60 °C | |
| BA 7962 (DC): | - 20 ... + 50 °C | |
| **Altitude:** | < 2,000 m | |
| **Clearance and creepage distances** | | |
| rated impulse voltage / pollution degree: | 4 kV / 2 | IEC 60 664-1 |

## Technical Data

### EMC

| | | |
|---|---|---|
| Electrostatic discharge: | 8 kV (air) | IEC/EN 61 000-4-2 |
| HF irradiation | | |
| 80 MHz ... 1 GHz: | 10 V / m | IEC/EN 61 000-4-3 |
| 1 GHz ... 2 GHz: | 3 V / m | IEC/EN 61 000-4-3 |
| 2 GHz ... 2.7 GHz: | 1 V / m | IEC/EN 61 000-4-3 |
| Fast transients: | 2 kV | IEC/EN 61 000-4-4 |
| Surge voltages between | | |
| wires for power supply: | 2 kV | IEC/EN 61 000-4-5 |
| between wire and ground: | 4 kV | IEC/EN 61 000-4-5 |
| Interference suppression: | Limit value class B | EN 55 011 |
| **Degree of protection** | | |
| Housing: | IP 40 | IEC/EN 60 529 |
| Terminals: | IP 20 | IEC/EN 60 529 |
| **Housing:** | Thermoplastic with V0 behaviour according to UL subject 94 | |
| **Vibration resistance:** | Amplitude 0.35 mm, frequency 10...55Hz | IEC/EN 60 068-2-6 |
| **Climate resistance:** | 20 / 060 / 04 | IEC/EN 60 068-1 |
| **Terminal arrangement:** | DIN 46 199-5 | |
| **Terminal designation:** | EN 50 005 | |
| **Wire connection:** | | |
| BA 7962: | 2 x 2.5 $mm^2$ solid or<br>2 x 1.5 $mm^2$ stranded wire with sleeve | |
| MK 9962: | 2 x 1.5 $mm^2$ solid or<br>2 x 1.0 $mm^2$ stranded wire with sleeve<br>DIN 46 228-1/-2/-3/-4 | |
| **Wire fixing:** | Flat terminals with self-lifting clamping piece | IEC/EN 60 999-1 |
| **Fixing torque** | | |
| BA 7962: | 0.8 Nm | |
| MK 9962: | 0.4 Nm | |
| **Mounting:** | DIN rail | IEC/EN 60 715 |
| **Weight** | | |
| BA 7962 (AC): | 240 g | |
| BA 7962 (DC): | 150 g | |
| MK 9962: | 180 g | |

### Dimensions

| | |
|---|---|
| **Width x height x depth:** | |
| BA 7962: | 45 x 73 x 133 mm |
| MK 9962: | 22.5 x 82 x 99 mm |

### Standard Type

MK 9962 AC/DC 24 V + AC 220 ... 240 V 15 ... 300 s

| | |
|---|---|
| Article number: | 0044937 |
| • Output: | 2 changeover contacts |
| • Nominal voltage $U_N$: | AC/DC 24 V + AC 220 ... 240 V |
| • Time range: | 15 ... 300 s |
| • Width: | 22.5 mm |

### Variants

| | |
|---|---|
| BA 7962.82/200: | 2 guided changeover contacts delayed |

**Ordering example for variants**

MK 9962 .82 /_ _ _ AC 220 ... 240 V 50 / 60 Hz 300 s

- 300 s: Time range end value
- 50 / 60 Hz: Nominal frequency
- AC 220 ... 240 V: Nominal voltage
- _ _ _: Variant, if required
- .82: Contact
- MK 9962: Type

### Accessories

| | |
|---|---|
| ET 4752-143: | Marking plate for MK 9962<br>Article number: 0043203 |

| Type | Function |
|---|---|
| **BA** | |
| BA 7924 | Delay module, release delay |
| **BD** | |
| BD 5935 | Emergency stop module |
| BD 5980N | Two-hand safety relay |
| BD 5987 | Emergency stop module |
| **BG** | |
| BG 5551 | Diagnostic module for CANopen |
| BG 5912 | Output module with output contacts |
| BG 5913.08/_0_ _ _ | Input module |
| BG 5913.08/_1 _ _ | Input module |
| BG 5913.08/_2_ _ _ | Input module |
| BG 5913.08/_3_ _ _ | Input module |
| BG 5914.08/_0_ _ _ | Input module |
| BG 5915.08/_1_ _ _ | Input module |
| BG 5924 | Emergency stop module |
| BG 5925 | Emergency stop module |
| BG 5925/900 | Light curtain controller |
| BG 5925/910 | Safety-mat switch gear |
| BG 5925/920 | Switch gear for safety switch |
| BG 5929 | Extension module |
| BG 5933 | Two-hand safety relay |
| BG 7925 | Delay module, release delay |
| BG 7926 | Delay module, release delay |
| **BH** | |
| BH 5552 | Diagnostic module for CANopen |
| BH 5902/01MF2 | Light curtain controller |
| BH 5903 | Emergency stop module with voltage failure detection |
| BH 5904/00MF2 | Valve monitoring module |
| BH 5910 | Multifunction safety module |
| BH 5911 | Control unit |
| BH 5913.08/_0_ _ _ | Input module |
| BH 5914.08/_0_ _ _ | Input module |
| BH 5915.08/_1_ _ _ | Input module |
| BH 5922 | Emergency stop monitor |
| BH 5928 | Emergency stop module with time delay |
| BH 5932 | Speed or standstill monitor |
| BH 5933 | Two-hand safety relay |
| BH 7925 | Delay module, release delay |

| Type | Function |
|---|---|
| **BI** | |
| BI 5910 | Radio controlled safety module |
| BI 5928 | Emergency stop module with time delay |
| BI 6910 | Radio controlled safety module |
| **BL** | |
| BL 5903 | Emergency stop module with voltage failure detection |
| BL 5922 | Emergency stop monitor |
| **BN** | |
| BN 3081 | Extension module |
| BN 5930.48 | Emergency stop module |
| BN 5930.48/203 | Emergency stop module |
| BN 5930.48/204 | Emergency stop module |
| BN 5983 | Emergency stop module |
| **BO** | |
| BO 5988 | Emergency stop module |
| **HC** | |
| HC 3096N | Interface module |
| HC 3098 | Interface module |
| **HK** | |
| HK 3087N | Interface module |
| **HL** | |
| HL 3094 | Interface module |
| HL 3096N | Interface module |
| **HO** | |
| HO 3094 | Interface module |
| HO 3095 | Interface module |
| **IK** | |
| IK 3079 | Interface module |
| **IL** | |
| IL 7824 | Delay module, release delay |
| **IN** | |
| IN 7824 | Delay module, release delay |
| **IP** | |
| IP 3078 | Interface module |
| IP 5924 | Emergency stop module |

| Type | Function |
|---|---|
| **LG** | |
| LG 3096 | Interface module |
| LG 5924 | Emergency stop module |
| LG 5925 | Emergency stop module |
| LG 5925/034 | Safety module for elevator controls |
| LG 5925/900 | Light curtain controller |
| LG 5925/920 | Safety module for safety switches |
| LG 5928 | Emergency stop module with time delay |
| LG 5929 | Extension module |
| LG 5933 | Two-hand safety relay |
| LG 5944 | Safety edge module |
| LG 7927 | Delay module, on delayed |
| LG 7928 | Delay module, release delay |
| **LH** | |
| LH 5946 | Standstill monitor |
| **MK** | |
| MK 3096N | Interface module |
| **NE** | |
| NE 5020 | Magnetic switch coded |
| NE 5021 | Magnetic switch coded |
| **RE** | |
| RE 5910 | Remote control for e-stop |
| RE 5910/011, | |
| RE 5910/013 | Industrial charger unit AC 230 V |
| RE 5910/012 | Industrial charger unit DC 24 V |
| RE 6910 | Radio controlled enabling switch |
| **RK** | |
| RK 5942 | Emergency stop module |

| Type | Function |
|---|---|
| **S** | |
| SAFEMASTER M | System overview |
| SAFEMASTER PRO | System overview |
| SAFEMASTER STS/K | System overview |
| SAFEMASTER STS | System overview |
| SAFEMASTER W | System overview |
| | Wireless safety system, e-stop |
| SAFEMASTER W | System overview |
| | Wireless safety system, enabling switch |
| **SP** | |
| SP 3078 | Interface module |
| **UF** | |
| UF 6925 | Emergency stop module |
| **UG** | |
| UG 3088 | Interface module |
| UG 3096 | Interface module |
| UG 6929 | Extension module |
| UG 6960 | Multifunctional safety timer |
| UG 6961 | Multifunctional safety timer |
| UG 6970 | Multifunctional safety module |
| UG 6980 | Multifunctional safety module |
| **UH** | |
| UH 3096 | Interface module |
| UH 5947 | Speed monitor |
| UH 6900 | Radio controlled safety module |
| UH 6932 | Speed monitor |
| UH 6937 | Frequency monitor |

| Type | Function |
|---|---|
| **AA** | |
| AA 9050 | Speed monitor |
| AA 9837 | Frequency relay |
| AA 9838 | Frequency relay |
| AA 9943 | Undervoltage relay |
| **AD** | |
| AD 5960 | Fault annunciator system |
| AD 5992 | Fault annunciator system |
| AD 5998 | Fault annunciator system |
| **AI** | |
| AI 938 | Thermistor motor protection relay |
| AI 941N | Phase sequence relay |
| AI 942 | Asymmetry relay |
| **AK** | |
| AK 9840 | Asymmetry relay |
| **BA** | |
| BA 9036 | Voltage relay |
| BA 9037 | Voltage relay |
| BA 9038 | Thermistor motor protection relay |
| BA 9040 | Asymmetry relay |
| BA 9041 | Phase sequence relay |
| BA 9042 | Asymmetry relay |
| BA 9043 | Undervoltage relay |
| BA 9053 | Current relay |
| BA 9054 | Voltage relay |
| BA 9055 | Speed monitor |
| BA 9054/331 | Battery symmetry monitor |
| BA 9054/332 | Battery symmetry monitor |
| BA 9065 | Underload monitor (cos φ) |
| BA 9094 | Temperature monitoring relay |
| BA 9837 | Frequency relay |
| **BC** | |
| BC 9190N | Voltage drop detector |
| **BD** | |
| BD 5936 | Standstill monitor |
| BD 9080 | Phase monitor |
| **BH** | |
| BH 9097 | Motor load monitor |
| BH 9098 | Motor load transmitter |
| BH 9140 | Reverse power monitoring |
| **EH** | |
| EH 5990 | Display unit |
| EH 5991 | Display unit |
| EH 5994 | Display unit |
| EH 5995 | Display unit |
| EH 5996 | Text display unit |
| EH 9997 | Fault annunciator system |

| Type | Function |
|---|---|
| **EP** | |
| EP 5966 | Fault annunciator system |
| EP 5967 | Fault annunciator system |
| **IK** | |
| IK 8839 | Current monitor |
| IK 9044 | Voltage monitor |
| IK 9046 | Voltage monitor |
| IK 9055 | Speed monitor |
| IK 9065 | Underload monitor (cos φ) |
| IK 9076 | Valve monitor |
| IK 9094 | Temperature monitoring relay |
| IK 9143 | Frequency relay |
| IK 9144 | Standstill monitor |
| IK 9168 | Phase indicator |
| IK 9169 | Phase monitor |
| IK 9170 | Overvoltage relay, 3-phase |
| IK 9171 | Undervoltage relay, 3-phase |
| IK 9172 | Overvoltage relay, single phase |
| IK 9173 | Undervoltage relay, single phase |
| IK 9178 | Phase sequence indicator |
| IK 9179 | Phase sequence monitor /-relay |
| IK 9270 | Overcurrent relay |
| IK 9271 | Undercurrent relay |
| IK 9272 | Overcurrent relay |
| IK 9273 | Undercurrent relay |
| **IL** | |
| IL 5201/20007 | Overcurrent relay |
| IL 5880 | Insulation monitor |
| IL 5881 | Insulation monitor |
| IL 5882 | Residual current monitor |
| IL 5990 | Fault annunciator system |
| IL 5991 | Fault annunciator system |
| IL 8839 | Current monitor |
| IL 9055 | Speed monitor |
| IL 9059 | Phase sequence module |
| IL 9069 | Neutral monitor |
| IL 9071 | Undervoltage relay |
| IL 9075 | Fuse monitor |
| IL 9077 | Over- and undervoltage relay |
| IL 9079 | Undervoltage relay to detect auto-reclosing |
| IL 9086 | Phase monitor with thermistor motor protection |
| IL 9087 | Phase monitor |
| IL 9094 | Temperature monitoring relay |
| IL 9144 | Standstill monitor |
| IL 9151 | Level sensing relay |
| IL 9163 | Thermistor motor protection relay |

| Type | Function |
|---|---|
| IL 9171 | Undervoltage relay, 3-phase |
| IL 9176 | Undervoltage relay, 3-phase with test key |
| IL 9270 | Overcurrent relay |
| IL 9271 | Undercurrent relay |
| IL 9277 | Over- and undercurrent relay |
| IL 9837 | Frequency relay |
| **IN** | |
| IN 5880/710 | Insulation monitor |
| IN 5880/711 | Insulation monitor |
| INFOMASTER B | System overview |
| **IP** | |
| IP 5880 | Insulation monitor |
| IP 5880/711 | Insulation monitor |
| IP 9075 | Fuse monitor |
| IP 9077 | Over- and undervoltage relay |
| IP 9270 | Overcurrent relay |
| IP 9271 | Undercurrent relay |
| IP 9277 | Over- and undercurrent relay |
| IP 9278 | Current asymmetry relay with integrated current transformer up to 15 A |
| **IR** | |
| IR 5882 | Residual current monitor |
| **LG** | |
| LG 5130 | Noise filter |
| **LK** | |
| LK 5894 | Insulation monitor |
| LK 5895 | Insulation monitor |
| LK 5896 | Insulation monitor |
| **MH** | |
| MH 5880 | Insulation monitor |
| MH 9055 | Speed monitor |
| MH 9064 | Voltage relay |
| MH 9143 | Mains frequency monitor |
| MH 9300 | Multifunction measuring relay |
| MH 9397 | Motor load monitor |
| MH 9837N | Frequency relay |
| MH 9837/5_0 | Frequency relay |

| Type | Function |
|---|---|
| **MK** | |
| MK 5130N | Noise filter |
| MK 5880N | Insulation monitor |
| MK 9003-ATEX | Thermistor motor protection relay |
| MK 9040N | Asymmetry relay |
| MK 9053N | Current relay |
| MK 9054N | Voltage relay |
| MK 9055N | Speed monitor |
| MK 9056N | Phase sequence relay |
| MK 9064N | Voltage relay |
| MK 9065 | Underload monitor (cos φ) |
| MK 9143N | Mains frequency monitor |
| MK 9151N | Level sensing relay |
| MK 9163N | Thermistor motor protection relay |
| MK 9163N-ATEX | Thermistor motor protection relay |
| MK 9300N | Multifunction measuring relay |
| MK 9397N | Motor load monitor |
| MK 9837N | Frequency relay |
| MK 9837N/5_0 | Frequency relay |
| MK 9994 | Lamp tester |
| MK 9995 | Lamp tester |
| **ND** | |
| ND 5015 | Residual current transformer |
| ND 5016 | Residual current transformer |
| ND 5017 | Residual current transformer |
| ND 5018 | Residual current transformer |
| ND 5019 | Residual current transformer |
| **OA** | |
| OA 9059 | Phase sequence module |
| **RK** | |
| RK 9169 | Phase monitor |
| RK 9179 | Phase sequence monitor /-relay |
| RK 9871 | Undervoltage relay |
| RK 9872 | Phase monitor |
| **RL** | |
| RL 9836 | Voltage relay |
| RL 9853 | Current relay |
| RL 9854 | Voltage relay |
| RL 9075 | Fuse monitor |
| RL 9877 | Phase monitor |
| **RN** | |
| RN 5883 | Residual current monitor, type B for AC and DC systems |
| RN 5897/010 | Insulation monitor |
| RN 5897/300 | Insulation monitor |
| RN 9075 | Fuse monitor |
| RN 9877 | Phase monitor |

| Type | Function |
|---|---|
| **RP** | |
| RP 5812 | SMS-Telecontrol module |
| RP 5888 | Insulation monitor |
| RP 5990 | Common alarm annunciator |
| RP 5991 | Common alarm annunciator |
| RP 5994 | New- / First- /Common signal annunciator |
| RP 5995 | New- / First- /Common signal annunciator |
| RP 9140 | Reverse power monitoring |
| RP 9800 | Voltage and frequency monitor |
| RP 9810 | Voltage and frequency monitor acc. to VDE-AR-N 4105 |
| RP 9811 | Voltage and frequency monitor |
| **RR** | |
| RR 5886 | Locating current injector |
| RR 5887 | Insulation fault locator |
| **SK** | |
| SK 9055 | Speed monitor |
| SK 9065 | Underload monitor (cos φ) |
| SK 9076 | Valve monitor |
| SK 9094 | Temperature monitoring relay |
| SK 9143 | Frequency relay |
| SK 9144 | Standstill monitor |
| SK 9168 | Phase indicator |
| SK 9169 | Phase monitor |
| SK 9170 | Overvoltage relay, 3-phase |
| SK 9171 | Undervoltage relay, 3-phase |
| SK 9172 | Overvoltage relay, single phase |
| SK 9173 | Undervoltage relay, single phase |
| SK 9178 | Phase sequence indicator |
| SK 9179 | Phase sequence monitor /-relay |
| SK 9270 | Overcurrent relay |
| SK 9271 | Undercurrent relay |
| SK 9272 | Overcurrent relay |
| SK 9273 | Undercurrent relay |
| **SL** | |
| SL 5201/20007CT | Overcurrent relay |
| SL 5880 | Insulation monitor |
| SL 5881 | Insulation monitor |
| SL 5882 | Residual current monitor |
| SL 5990 | Fault annunciator system |
| SL 5991 | Fault annunciator system |
| SL 9055 | Speed monitor |
| SL 9059 | Phase sequence module |
| SL 9065 | Underload monitor (cos φ) |
| SL 9069 | Neutral monitor |
| SL 9071 | Undervoltage relay |
| SL 9075 | Fuse monitor |
| SL 9077 | Over- and undervoltage relay |
| SL 9079 | Undervoltage relay to detect auto-reclosing |
| SL 9086 | Phase monitor with thermistor motor protection |
| SL 9087 | Phase monitor |
| SL 9094 | Temperature monitoring relay |
| SL 9144 | Standstill monitor |
| SL 9151 | Level sensing relay |
| SL 9163 | Thermistor motor protection relay |
| SL 9171 | Undervoltage relay, 3-phase |
| SL 9270 | Overcurrent relay |
| SL 9270CT | Overcurrent relay |
| SL 9271 | Undercurrent relay |
| SL 9271CT | Undercurrent relay |
| SL 9277 | Over- and undercurrent relay |
| SL 9277CT | Over- and undercurrent relay |
| SL 9837 | Frequency relay |
| **SP** | |
| SP 5880 | Insulation monitor |
| SP 9075 | Fuse monitor |
| SP 9077 | Over- and undervoltage relay |
| SP 9270 | Overcurrent relay |
| SP 9270CT | Overcurrent relay |
| SP 9271 | Undercurrent relay |
| SP 9271CT | Undercurrent relay |
| SP 9277 | Over- and undercurrent relay |
| SP 9277CT | Over- and undercurrent relay |
| SP 9278 | Current asymmetry relay with integrated current transformer up to 15 A |
| SP 9278CT | Current asymmetry relay with integrated current transformer up to 100 A |
| **UG** | |
| UG 9075 | Fuse monitor |
| **UH** | |
| UH 5892 | Insulation monitor |

| Type | Function |
|---|---|
| **BA** | |
| BA 9010 | Softstarter |
| BA 9019 | Softstarter with softstop |
| BA 9026 | Softstarter with softstop |
| BA 9034N | Motor brake relay |
| **BF** | |
| BF 9250 | Solid-state contactor |
| BF 9250/_ _8 | Solid-state contactor |
| BF 9250/002 | Semiconductor contactor with analogue input for pulsed output |
| BF 9250/042 | Solid-state contactor with burst control |
| **BH** | |
| BH 9250 | Solid-state contactor |
| BH 9251 | Semiconductor contactor with current monitoring |
| BH 9253 | Reversing contactor |
| BH 9255 | Reversing contactor with current monitor |
| **BI** | |
| BI 9025 | Softstarter |
| BI 9028 | Softstarter with DC-brake |
| BI 9028/900 | Softstarter for 1-phase motors |
| BI 9034 | Motor brake relay |
| BI 9254 | Reversing contactor with softstart and active power monitoring |
| **BL** | |
| BL 9025 | Softstarter |
| **BN** | |
| BN 9011 | Softstarter |
| BN 9034 | Motor brake relay |
| **GB** | |
| GB 9034 | Motor brake relay |
| **GF** | |
| GF 9016 | Softstarter and softstop device |
| **GI** | |
| GI 9014 | Softstart- / softstop device |
| GI 9015 | Softstart- / softstop device |
| **IL** | |
| IL 9017 | Softstarter |
| IL 9017/300 | Softstarter with softstop |
| **IN** | |
| IN 9017 | Phase controller |

| Type | Function |
|---|---|
| **PF** | |
| PF 9029 | Softstarter for heating pumps |
| **PH** | |
| PH 9260 | Solid-state relay / - contactor |
| PH 9260.92 | Solid-state relay / - contactor |
| PH 9260/042 | Solid-state relay / - contactor with analogue input for pulse package control |
| PH 9270 | Solid-state relay / - contactor with load circuit monitoring |
| PH 9270/003 | Solid-state relay / - contactor with load current measurement |
| **PI** | |
| PI 9260 | Solid-state relay / - contactor |
| **PK** | |
| PK 9260 | Solid-state relay / - contactor for resistive load |
| **RP** | |
| RP 9210/300 | Softstart / softstop with reverse function |
| **SL** | |
| SL 9017 | Softstarter |
| **SX** | |
| SX 9240.01 | Speed controller 1-phase |
| SX 9240.03 | Speed controller 3-phase |
| **UG** | |
| UG 9019 | Softstarter with softstop |
| UG 9256 | Smart motorstarter |
| UG 9256/804 | Smart motorstarter with autom. phase sequence correction |
| UG 9256/807 | Smart motorstarter with autom. phase sequence correction |
| UG 9410 | Smart motorstarter |
| UG 9411 | Smart motorstarter |
| **UH** | |
| UH 9018 | Softstarter |

| Type | Function |
|---|---|
| **AD** | |
| AD 866 | Switching Relay |
| AD 8851 | Latching relay |
| **BA** | |
| BA 7632 | Stepping relay |
| BA 7961 | Contact protection relay |
| **BD** | |
| BD 3083/100 | Interface module |
| **BG** | |
| BG 5595 | Switched power supply |
| **CA** | |
| CA 3056 | Input-Output interface relay |
| **CB** | |
| CB 3056 | Input-Output interface relay |
| CB 3057 | Output interface relay |
| **CC** | |
| CC 3056 | Input-Output interface relay |
| **HC** | |
| HC 3093 | Interface relay pluggable |
| HC 3093.__/3__ | Interface relay pluggable |
| HC 3096N | Interface module |
| HC 3098 | Interface module |
| **HK** | |
| HK 3087N | Interface module |
| **HL** | |
| HL 3094 | Interface module |
| HL 3096N | Interface module |
| HL 3096N.__C/400 | Interface module |
| **HO** | |
| HO 3094 | Interface module |
| HO 3095 | Interface module |

| Type | Function |
|---|---|
| **IG** | |
| IG 3051 | Input-Output interface relay |
| **IK** | |
| IK 3050 | Interface relay |
| IK 3070 | Input-Output interface relay |
| IK 3076 | Input-Output interface relay |
| IK 3079 | Interface module |
| IK 5121 | Protective diode module |
| IK 8701 | Input-Output interface relay / Switching relay |
| IK 8802 | Input-Output interface relay |
| **IL** | |
| IL 5504 | CANopen PLC |
| IL 5507 | Output module, analogue |
| IL 5508 | Input module, analogue |
| IL 8701 | Input-Output interface relay / Switching relay |
| **IN** | |
| IN 5509 | Input- / Output module, digital |
| IN 8701 | Input-Output interface relay / Switching relay |
| **IP** | |
| IP 3070/022 | Output interface relay |
| IP 3078 | Interface module |
| IP 5502 | Input module, digital |
| IP 5503 | Output module, digital |
| **LG** | |
| LG 3096 | Interface module |
| **MK** | |
| MK 3046 | Interface relay |
| MK 3096N | Interface module |
| MK 8804N | Interface relay |
| MK 8852 | Latching relay |
| **ML** | |
| ML 3045 | Input-Output interface relay |
| ML 3059 | Input interface relay |

| Type | Function |
|---|---|
| **RL** | |
| RL 5596 | Switched power supply |
| **SK** | |
| SK 3076 | Input-Output interface relay |
| **SP** | |
| SP 3078 | Interface module |
| **UG** | |
| UG 3076/007 | Interface relay |
| UG 3088 | Interface module |
| UG 3091 | Interface module |
| UG 3096 | Interface module |
| UG 5122 | Diode module |
| UG 5123 | Resistor module |
| UG 8851 | Latching relay |
| UG 9460 | Input- / Output module digital, for Modbus |
| UG 9461 | Input- / Output module analogue, for Modbus |
| **UH** | |
| UH 3096 | Interface module |

| Type | Function |
|---|---|
| **AA** | |
| AA 7512 | Timer |
| AA 7562 | Timer |
| AA 7610 | Timer |
| AA 7616 | Timer |
| AA 7666 | Timer |
| AA 9906/200 | Timer |
| **BA** | |
| BA 7864 | Cyclic timer |
| BA 7903 | Timer |
| BA 7905 | Timer |
| BA 7954 | Timer |
| BA 7962 | Timer |
| BA 7981 | Flasher relay |
| **BC** | |
| BC 7930N | Timer |
| BC 7931N | Fleeting action relay |
| BC 7932N | Flasher relay |
| BC 7933N | Timer |
| BC 7934N | Timer |
| BC 7935N | Multifunction relay |
| BC 7936N | Star-delta timer |
| BC 7937N | Cyclic timer |
| BC 7938N | Timer |
| BC 7939N | Timer |
| **EC** | |
| EC 7610 | Timer |
| EC 7616 | Timer |
| EC 7666 | Timer |
| EC 7801 | Timer |
| EC 9621 | Timer |
| **EF** | |
| EF 7610 | Timer |
| EF 7616 | Timer |
| EF 7666 | Timer |
| **EH** | |
| EH 7610 | Timer |
| EH 7616 | Timer |
| EH 7666 | Timer |
| **EO** | |
| EO 7864 | Cyclic timer |

| Type | Function |
|---|---|
| **IK** | |
| IK 7813 | Timer |
| IK 7814 | Timer |
| IK 7815 | Fleeting action relay |
| IK 7816 | Flasher relay |
| IK 7817N/200 | Multifunction relay |
| IK 7818 | Fleeting action relay |
| IK 7819 | Timer |
| IK 7820 | Fleeting action relay |
| IK 7823 | Timer |
| IK 7825 | Timer |
| IK 7826 | Fleeting action relay |
| IK 7827 | Flasher relay |
| IK 7854 | Cyclic timer |
| IK 8808 | Timer |
| IK 9906 | Timer |
| IK 9962 | Timer |
| **MK** | |
| MK 7830N | Multifunction relay, digital |
| MK 7850N/200 | Multifunction relay |
| MK 7851 | Flasher relay |
| MK 7852 | Flasher relay |
| MK 7853N | Star-delta timer |
| MK 7854N | Cyclic timer |
| MK 7858 | Timer |
| MK 7863 | Timer |
| MK 7873N | Timer |
| MK 9906 | Timer |
| MK 9906N | Timer |
| MK 9906N/600 | Timer |
| MK 9908 | Timer |
| MK 9961 | Timer |
| MK 9962 | Timer |
| MK 9962N | Timer |
| MK 9988 | Fleeting action relay |
| MK 9989 | Fleeting action relay |

| Type | Function |
|---|---|
| **RK** | |
| RK 7813 | Timer |
| RK 7814 | Timer |
| RK 7815 | Fleeting action relay |
| RK 7816 | Flasher relay |
| RK 7817 | Multifunction relay |
| **SK** | |
| SK 7813 | Timer |
| SK 7814 | Timer |
| SK 7815 | Fleeting action relay |
| SK 7816 | Flasher relay |
| SK 7817N/200 | Multifunction relay |
| SK 7819 | Timer |
| SK 7820 | Fleeting action relay |
| SK 7823 | Timer |
| SK 7854 | Cyclic timer |
| SK 9906 | Timer |
| SK 9962 | Timer |
| **SN** | |
| SN 7920 | Multifunction relay |

| Type | Function |
|---|---|
| **IK** | |
| IK 3070/200 | Hybrid relay |
| IK 3071 | Input interface relay |
| IK 5115 | Display unit |
| IK 8701 | Switching relay |
| IK 8702 | Remote switch (Impulse relay) |
| IK 8702/200 | Remote switch (Impulse relay) |
| IK 8715 | Priority relay |
| IK 8717 | Remote switch (Impulse relay) |
| IK 8717/110 | Remote switch (Impulse relay) |
| IK 8800 | Remote switch (Impulse relay) |
| IK 8805 | Remote switch f. central switch. op. |
| IK 8807 | Remote switch f. central switch. op. |
| IK 8810 | Staircase lighting time switch |
| IK 8810/001 | Staircase lighting time switch |
| IK 8810/002 | Staircase lighting time switch |
| IK 8810/003 | Staircase lighting time switch |
| IK 8810/004 | Staircase lighting time switch |
| IK 8810/005 | Fan control timer |
| IK 8813 | Energy saving time switch |
| IK 8814 | Light timing switch |
| IK 8825 | Light timing switch |
| IK 8830 | Stepping switch |
| IK 8832 | Buzzer |
| IK 9078 | Mains relay |
| IK 9171 | Undervoltage relay, 3-phase |
| **IL** | |
| IL 7824 | Delay module |
| IL 8701 | Switching relay |
| IL 8800 | Remote switch (Impulse relay) |
| IL 8805 | Remote switch f. central switch. op. |
| IL 8809 | Remote switch for central and group switching operation |
| IL 9171 | Undervoltage relay, 3-phase |

| Type | Function |
|---|---|
| **RK** | |
| RK 8810/001 | Staircase lighting time switch |
| RK 8810/002 | Time switch with pre-warning |
| RK 8810/003 | Light timing switch |
| RK 8810/004 | Energy saving time switch |
| RK 8810/005 | Fan control timer |
| RK 8810/006 | Energy saving time switch |
| RK 8810/100 | Staircase lighting time switch |
| RK 8832 | Buzzer |
| **SK** | |
| SK 8702 | Remote switch (Impulse relay) |
| SK 8702/200 | Remote switch (Impulse relay) |
| SK 8832 | Buzzer |
| SK 9078 | Mains relay |
| SK 9171 | Undervoltage relay, 3-phase |
| **SL** | |
| SL 9171 | Undervoltage relay, 3-phase |
| **IN** | |
| IN 7824 | Delay module |
| IN 8701 | Switching relay |
| **OA** | |
| OA 8823 | Energy saving time switch |
| OA 8824 | Light timing switch |
| OA 8825 | Light timing switch |

**Алматы** (727)345-47-04
**Ангарск** (3955)60-70-56
**Архангельск** (8182)63-90-72
**Астрахань** (8512)99-46-04
**Барнаул** (3852)73-04-60
**Белгород** (4722)40-23-64
**Благовещенск** (4162)22-76-07
**Брянск** (4832)59-03-52
**Владивосток** (423)249-28-31
**Владикавказ** (8672)28-90-48
**Владимир** (4922)49-43-18
**Волгоград** (844)278-03-48
**Вологда** (8172)26-41-59
**Воронеж** (473)204-51-73
**Екатеринбург** (343)384-55-89
**Иваново** (4932)77-34-06
**Ижевск** (3412)26-03-58
**Иркутск** (395)279-98-46
**Казань** (843)206-01-48
**Калининград** (4012)72-03-81
**Калуга** (4842)92-23-67
**Кемерово** (3842)65-04-62
**Киров** (8332)68-02-04
**Коломна** (4966)23-41-49
**Кострома** (4942)77-07-48
**Краснодар** (861)203-40-90
**Красноярск** (391)204-63-61
**Курск** (4712)77-13-04
**Курган** (3522)50-90-47
**Липецк** (4742)52-20-81
**Магнитогорск** (3519)55-03-13
**Москва** (495)268-04-70
**Мурманск** (8152)59-64-93
**Набережные Челны** (8552)20-53-41
**Нижний Новгород** (831)429-08-12
**Новокузнецк** (3843)20-46-81
**Ноябрьск** (3496)41-32-12
**Новосибирск** (383)227-86-73
**Омск** (3812)21-46-40
**Орел** (4862)44-53-42
**Оренбург** (3532)37-68-04
**Пенза** (8412)22-31-16
**Петрозаводск** (8142)55-98-37
**Псков** (8112)59-10-37
**Пермь** (342)205-81-47
**Ростов-на-Дону** (863)308-18-15
**Рязань** (4912)46-61-64
**Самара** (846)206-03-16
**Санкт-Петербург** (812)309-46-40
**Саратов** (845)249-38-78
**Севастополь** (8692)22-31-93
**Саранск** (8342)22-96-24
**Симферополь** (3652)67-13-56
**Смоленск** (4812)29-41-54
**Сочи** (862)225-72-31
**Ставрополь** (8652)20-65-13
**Сургут** (3462)77-98-35
**Сыктывкар** (8212)25-95-17
**Тамбов** (4752)50-40-97
**Тверь** (4822)63-31-35
**Тольятти** (8482)63-91-07
**Томск** (3822)98-41-53
**Тула** (4872)33-79-87
**Тюмень** (3452)66-21-18
**Ульяновск** (8422)24-23-59
**Улан-Удэ** (3012)59-97-51
**Уфа** (347)229-48-12
**Хабаровск** (4212)92-98-04
**Чебоксары** (8352)28-53-07
**Челябинск** (351)202-03-61
**Череповец** (8202)49-02-64
**Чита** (3022)38-34-83
**Якутск** (4112)23-90-97
**Ярославль** (4852)69-52-93

**Россия** +7(495)268-04-70 **Казахстан** +7(727)345-47-04 **Беларусь** +(375)257-127-884 **Узбекистан** +998(71)205-18-59 **Киргизия** +996(312)96-26-47

**https://dold.nt-rt.ru/ || ddo@nt-rt.ru**